CONSTRUCTION PLANS FOR THE: COMMUNITY CENTER

HARBOR PARK APARTMENTS, 969 SONOMA STREET, VALLEJO, CALIFORNIA

AREA MAP

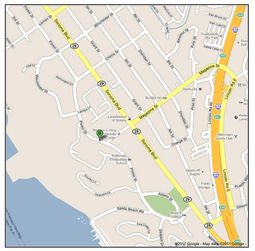

LOCATION MAP

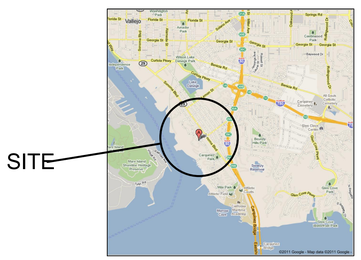

ABBREVIATIONS

&	AND	EQ.	EQUAL	N.I.C.	NOT IN CONTRACT
∠	ANGLE	EQPT.	EQUIPMENT	NO. OR #	NUMBER
@	AT	EXIST.	EXISTING	NOM.	NOMINAL
#	POUND OR NUMBER	EXP.	EXPANSION	N.T.S.	NOT TO SCALE
(E)	EXISTING	EXT.	EXTERIOR	O.C.	ON CENTER
(N)	NEW	FDN.	FOUNDATION	O.D.	OUTSIDE DIAMETER (DIM)
ADJ.	ADJUSTABLE	FIN.	FINISH	OPNG.	OPENING
AGGR.	AGGREGATE	F.F.	FINISH FLOOR	OPP.	OPPOSITE
APPROX.	APPROXIMATE	FL.	FLOOR	PRCST.	PRECAST
ARCH.	ARCHITECT	F.O.C.	FACE OF CONCRETE	PL.	PLATE
BLDG.	BUILDING	F.O.F.	FACE OF FINISH	PLAS.	PLASTER
BLK.	BLOCK	F.O.S.	FACE OF STUDS	PLYWD.	PLYWOOD
BLKG.	BLOCKING	FT.	FOOT OR FEET	PT.	POINT
BM.	BEAM	FTG.	FOOTING	PTN.	PARTITION
BOT.	BOTTOM	FUT.	FUTURE	RM.	ROOM
CEM.	CEMENT	GA.	GAUGE	R.O.	ROUGH OPENING
CLG.	CEILING	GALV.	GALVANIZED	S.	SOUTH
CLR.	CLEAR	GND.	GROUND	SCHED.	SCHEDULE
C.J.	CONSTRUCTION JOINT	GR.	GRADE	SECT.	SECTION
COL.	COLUMN	GYP.	GYPSUM	SHT.	SHEET
CONC.	CONCRETE	HORIZ.	HORIZONTAL	SIM.	SIMILAR
CONN.	CONNECTION	HGT.	HEIGHT	SQ.	SQUARE
CONSTR.	CONSTRUCTION	INSUL.	INSULATION	STD.	STANDARD
CONT.	CONTINUOUS	INT.	INTERIOR	STL.	STEEL
CTSK.	COUNTERSUNK	JT.	JOINT	STRL.	STRUCTURAL
CTR.	CENTER	LAB.	LABORATORY	SUSP.	SUSPENDED
DBL.	DOUBLE	LAM.	LAMINATE	SYM.	SYMMETRICAL
DEPT.	DEPARTMENT	LAV.	LAVATORY	THK.	THICK
DET.	DETAIL	LKR.	LOCKER	T.W.	TOP OF WALL
DIA.	DIAMETER	LT.	LIGHT	T. & B.	TOP AND BOTTOM
DIM.	DIMENSION	LT. WT.	LIGHT WEIGHT	T.O.F.	TOP OF FOOTING
DN.	DOWN	MAX.	MAXIMUM	T.O.S.	TOP OF STEEL
DWG	DRAWING	MECH.	MECHANICAL	TYP.	TYPICAL
E.	EAST	MEMB.	MEMBRANE	U.O.N.	UNLESS OTHERWISE NOTED
EA.	EACH	MET.	METAL	VERT.	VERTICAL
E.J.	EXPANSION JOINT	MISC.	MISCELLANEOUS	W.	WEST
EL.	ELEVATION	M.O.	MASONRY OPENING	W/	WITH
ELEC.	ELECTRICAL	MUL.	MULLION	W/O	WITHOUT
ELEV.	ELEVATOR	N.	NORTH	WP.	WEAKENED PLANE
				WT.	WEIGHT

APPLICABLE CODES

CALIFORNIA FIRE CODE 2010 EDITION
CALIFORNIA BUILDING CODE 2010 EDITION
CALIFORNIA MECHANICAL CODE 2010 EDITION
CALIFORNIA PLUMBING CODE 2010 EDITIONUPC
CALIFORNIA ELECTRIC CODE 2010 EDITION
CALIFORNIA ENERGY CODE 2010 EDITION

COMPLY WITH ALL LOCAL, STATE, FEDERAL AND PUBLIC AGENCY LAWS AND REGULATIONS
THE USE OF ABS & PVC DRAIN WASTE, AND VENT PIPING IS PROHIBITED

SPECIAL INSPECTION REQUIREMENTS

SPECIAL INSPECTION IS REQUIRED FOR THE FOLLOWING:
1. STRUCTURAL WELDING
2. HIGH STRENGTH BOLTING

CODE SUMMARY AND ANALYSIS

AUTHORITY: CITY OF VALLEJO, CALIFORNIA
BUILDING DEPARTMENT

CODE: CBC - 2010 EDITION

ZONING: HIGH DENSITY RESIDENTIAL

CONSTRUCTION TYPE: 5B- SPRINKLERED

OCCUPANCY GROUP: GROUND FLOOR: A3- COMMUNITY HALL
SECOND AND THIRD FLOOR: R2

BUILDING CODE ANALYSIS:

CBC TABLE 503, TYPE V-B CONSTRUCTION:
A. ALLOWABLE BUILDING HEIGHT = 40 FEET
B. PROPOSED BUILDING HEIGHT = 38.863 FEET

CBC TABLE 503, A-3 OCCUPANCY:
C. ALLOWABLE AREA PER STORY = 6000 S.F.
D. PROPOSED AREA = 2,118 S.F. < 6,000 THEREFORE OK.
E. ALLOWABLE NUMBER OF STORIES = ONE
F. PROPOSED NUMBER OF STORIES = ONE, THRERFORE OK

CBC TABLE 503, R-2 OCCUPANCY:
G. ALLOWABLE AREA PER STORY 7000 S,F,
H. PROPOSED AREA = 2,720 SF, < 7,000 S.F. THEREFORE OK
I. ALLOWABLE NUMBER OF STORIES = TWO
J. PROPOSED NUMBER OF STORIES = THREE, SPRINKLERS USED TO INCREASE STORIES.

CBC 506.3:
K. SPRINKLERS USED TO INCREASE ALLOWABLE NUMBER OF STORIES FOR R-2 FROM TWO TO THREE

CBC 508, 4.4 NAND TABLE 508.4:
L. REQUIRE SEPARATION BETWEEN A-3 AND R-2 OCCUPANCIES = ONE HOUR RATED HORIZONTAL ASSEMBLY

CBC 420.2 AND 709.3:
M. REQUIRED SEPARATION BETWEEN DWELLING UNITS = ONE HOUR RATED FIRE WALLS.

BUILDING CODE ANALYSIS: ARAE RATIOS AND EXITING REQUIREMENTS

A. BASIC BUILDING AREAS ALLOWED: TYPE A3-6000;
ACTUAL AREA: 2118 SF RATIO $-\frac{2118}{6000} = .353$
B. BASIC BUILDING AREA FOR R2 OCCUPANCY: 7000 SF
ACTUAL AREA: 2720 SF RATIO $= \frac{2720}{7000} = .388$
C. COMBINED RATIO = .741 < 1

EXITING REQUIREMENTS
GREAT ROOM AND VESTIBULE: OCCUPANT LOAD = 51 TWO EXITS REQUIRED
OFFICE 1, OFFICE 2, STORAGE/COPY, BUSINESS CENTER-1 EACH I EXIT REQ,
FITNESS CENTER 7 OCCUPANTS I EXIST REQUIRED.
KITCHEN WOMEN, MEN ROOMS, UTILITY ROOM-I OCCUP. EA 1 EXIT REQ.
APARTMENT: 960, 980, 780 SF. I EXIT REQUIRED,

DEFERRED SUBMITTALS

1. ROLLING SECURITY GATE SHOWN ON DETAIL 21 SHEET A9.4
2. ROOF TRUSS SHOP DRAWINGS
3. SPRINKLER SYSTEM PIPING AND SHOP DRAWINGS.
4. 4 SPACE PRIVATE GARAGE BUILDING
5. RETAINING WALL STRUCTURES

DEFERRED SUBMITTALS REQUIRE SEPARATE PERMIT APPLICATIONS AND PLAN CHECK REVIEW, AND PERMIT FEES..

PROJECT TEAM

OWNER: SONOMA APARTMENTS
1015 PORTER ST.
VALLEJO, CALIFORNIA 94621

ARCHITECT: OAKLEY & OAKLEY
ENGINEERS & ARCHITECTS
7700 EDGEWATER DRIVE
SUITE 615
OAKLAND, CA 94621
CONTACT JOE OAKLEY 510-562-6028

CONTRACTOR: DCMI CONSTRUCTION: CONTACT MIKE GOLDSMITH, 831-427-9099

SCOPE OF WORK

1) CONSTRUCTION OF NEW MIXED USE COMMUNITY BUILDING ON THE 1ST FLOOR AND 3 RESIDENTIAL UNITS ON THE 2ND FLOOR.

GENERAL NOTES

1. VERIFY ALL CONDITIONS AND DIMENSIONS PRIOR TO ANY WORK. ALL CONSTRUCTION MUST COMPLY WITH ALL LOCAL GOVERNING CODES.
2. DO NOT SCALE DRAWINGS.
3. REPORT TO THE ENGINEER ANY ERROR OR OMISSION DISCOVERED IN THE DRAWINGS, OR ANY INCONSISTENCY BETWEEN THE DRAWINGS AND FIELD CONDITIONS, PRIOR TO CONSTRUCTION SO THAT THE ENGINEER MAY ISSUE WRITTEN CLARIFICATION IN A TIMELY MANNER.
4. OBTAIN ALL PERMITS AND PAY ALL FEES.
5. PROVIDE ADEQUATE BLOCKING AT THE REQUIRED LOCATIONS FOR ALL WALL MOUNTED SHELVING, TABLES, ETC.
6. SUBCONTRACTORS ARE RESPONSIBLE FOR RECEIVING AND ON-SITE STORAGE OF ALL SOFT-GOODS (SMALL WARES, ETC.) DURING REGULAR CONSTRUCTION HOURS.
7. SUBCONTRACTORS SHALL CONTROL NOISE PRODUCING ITEMS (STEREOS) AT ALL TIMES.
8. INTERIOR WALLS TO BE 5/8" TYPE X GYP. BD. ON EACH SIDE OF WOOD STUDS UNLESS NOTED OTHERWISE. EXTEND ANY NEW WALLS TO 6" ABOVE THE HIGHER CEILING.
9. FIRE EXTINGUISHERS ARE TO BE MAINTAINED ON THE PREMISES AT LOCATIONS APPROVED BY THE FIRE DEPARTMENT, AND SHALL BE MULTIPURPOSE DRY CHEMICAL TYPE, RATED 4-A:60-B.C., 10 LB NOMINAL CAPACITY AND IN ENAMELED STEEL CONTAINER, FOR CLASS I, CLASS B, AND CLASS C. FIRES. MOUNT IN MANUFACTURERS STANDARD
10. PROVIDE "L-METAL". ALL WALLS TO BE TAPED. VERIFY WITH OWNER WHICH WALLS TO RECEIVE WALL COVERING. PRIME THESE WALLS WITH ONE COAT OF PRIMER.
11. REFER TO FLOOR PLAN FOR NEW LIGHT FIXTURES AND ELECTRICAL OUTLETS.
12. ALL MECHANICAL AND ELECTRICAL EQUIPMENT SHALL HAVE A UL DESIGN/LISTING NUMBER. ANY EQUIPMENT NOT LISTED WILL BE REQUIRED TO BE FIELD TESTED AND CERTIFIED BY AN APPROVED TESTING AGENCY. IT IS THE RESPONSIBILITY OF THE OWNER AND HIS/HER DESIGN/ CONSTRUCTION TEAM TO NOTIFY THE BUILDING DEPARTMENT IF FIELD TESTING IS REQUIRED FOR ANY EQUIPMENT WITHOUT A UL OR EQUIVALENT LISTED LABEL APPROVED BY THE VALLEJO BUILDING DEPARTMENT. PROOF OF EQUIPMENT CERTIFICATION WILL NEE TO BE SUBMITTED AND APPROVED BEFORE A CERTIFICATE OF OCCUPANCY CAN BR ISSUED

SPECIAL NOTES

1.
a. PRIOR TO REQUESTING A FOUNDATION INSPECTION BY THE CITY, THE GEOTECHNICAL ENGINEER SHALL STATE IN WRITING:
1. THE BUILDING PAD WAS PREPARED AND COMPACTED IN ACCORDANCE WITH THE SOIL REPORT AND SPECIFICATION.
2. THE UTILITY TRENCHES HAVE BEEN PROPERLY BACK FILLED AND COMPACTED.
3. THE FOUNDATION EXCAVATION, DEPTH, AND MATERIAL COMPLY WITH THE SOIL REPORT AND APPROVED PLANS.
b. PRIOR TO FINAL INSPECTION FOR ANY BUILDING STRUCTURE, THE ENGINEER OF RECORD SHALL A FINAL LETTER STATING THE COMPLETED PAD, FOUNDATION, ROUGH GRADING, AND ASSOCIATED SITE WORK SUBSTANTIALLY CONFORMS TO THE APPROVED PLANS, SPECIFICATIONS, AND INVESTIGATION

SPECIAL OBSERVATION REQUIREMENTS

SPECIAL OBSERVATION IS REQUIRED FOR THE FOLLOWING:
1. STRUCTURAL WELDING
2. HIGH STRENGTH BOLTING
3. FINAL STRUCTURAL OBSERVATION LETTER IS REQUIRED BY ENGINEER AND MUST BE RETURNED TO BUILDING DEPARTMENT PRIOR TO ISSUANCE OF PERMIT

DRAWING LIST

REVISIONS				SET	SHT.	TITLE
						ARCHITECTURAL
				X	A0.0	TITLE SHEET
				X	A0.1	PATH OF TRAVEL
				X	A1.1	SITE PLAN
				X	A1.2	SITE DETAILS
				X	A1.3	ENLARGED ACCESSIBLE RAMP PLANS
				X	C2.1	GRADING PLAN
				X	A2.1	FIRST FLOOR PLAN
				X	A2.21	SECOND & THIRD FLOOR PLANS
				X	A2.24	EXTERIOR ELEVATIONS
				X	A2.25	EXTERIOR ELEVATION AND ROOF PLAN
				X	A2.29	INTERIOR ELEVATIONS
				X	A2.3	INTERIOR ELEVATION UNITS A, B, C
				X	A2.4	REFLECTED CEILING PLAN COMMUNITY BUILDING
				X	A4.1	DOOR, WINDOW, AND FINISH SCHEDULE COMMUNITY BUILDONG
				X	A4.11	FINISH SCHEDULE UNITS A,B,C
				X	A7.1	BUILDING SECTIONS
				X	A7.2	BUILDING SECTIONS
				X	A7.3	STAIRWAY DETAILS
				X	A8.1	BUILDING WALL SECTIONS
				X	A9.1	DOOR AND WINDOW SCHEDULE UNITS A,B,C
				X	A9.2	ARCHITECTURAL DETAILS
				X	A9.3	ARCHITECTURAL DETAILS
				X	A9.4	ARCHITECTURAL DETAILS
				X	A9.41	ARCHITECTURAL DETAILS
				X	A9.42	ARCHITECTURAL DETAILS
				X	A9.5	STAIRWAY 1 & 2 DETAILS
						STRUCTURAL
				X	S0.1	GENERAL NOTES
				X	S1.1	FOUNDATION PLAN
				X	S1.2	SECOND FLOOR FRAMING PLAN
				X	S1.3	ROOF FRAMING PLAN
				X	S1.4	ROOF FRAMING PLAN
				X	S3.1	TYPICAL FOUNDATION DETAILS
				X	S3.2	FOUNDATION DETAILS
				X	S3.21	FOUNDATION & FRAMING DETAILS
				X	S5.1	STAIR FRAMING DETAILS
				X	S6.1	TYPICAL WOOD FRAMING DETAILS
				X	S6.2	TYPICAL WOOD SHEAR WALL FRAMING DETAILS
				X	S6.3	WOOD FRAMING DETAILS
				X	S6.3.1	WOOD FRAMING DETAILS
				X	S6.4	WOOD FRAMING DETAILS
				X	S8	TYPICAL HARDY FRAMING DETAILS
				X	S9	TYPICAL HARDY FRAMING DETAILS
						MECHCANIAL/ELECTRICAL/PLUMBING
				X	M01	GROUND FLOOR MECHANICAL PLAN
				X	M03	SECOND FLOOR MECHANICAL PLAN
				X	M04	THIRD FLOOR MECHANICAL PLAN
				X	M05	MECHANICAL DETAILS-FIRE DAMPERS
				X	P01	GROUND FLOOR PLUMBING PLAN
				X	P02	SECOND & 3RD FLOOR PLUMBING PLAN
				X	P04	PLUMBING ISOMETRICS
				X	E01	GROUND FLOOR POWER PLAN
				X	E02	GROUND FLOOR LIGHTING PLAN
				X	E2	DETAILS, PANEL SCHEDULES FOR GROUND FLOOR
				X	E03	2ND FLOOR ELECTRICAL PLAN
				X	E04	3RD FLOOR ELECTRICAL PLAN
						FIRE PROTECTION
				X	FAS1	GROUND SPRINKLER PLAN
				X	FAS2	SECOND FLOOR SPRINKLER PLAN
				X	FAS3	THIRD FLOOR SPRINKLER PLAN
						LANDSCAPE
				X	L1.1	NOT INCLUDED
						CIVIL
				X	CA1.1	SITE,GRADING AND UTILITY PLAN
						TITLE 24
				X	A24.1	TITLE 24
				X	A24.2	TITLE 24
				X	A24.3	TITLE 24
				X	A24.4	TITLE 24

REVISIONS	BY
9/26/2011 - PLAN CHECK	G.O.
1/26/2014 - BIDDING	LR

LICENSED ARCHITECT
JOSEPH OAKLEY
No. 15457
REN. 9-30-15
STATE OF CALIFORNIA

OAKLEY & OAKLEY
ARCHITECT, CIVIL & STRUCTURAL ENGINEERS
7700 EDGEWATER DRIVE SUITE 615
OAKLAND, CA 94621
PH 510 562 6028
FAX 510 562 6043

PROJECT TITLE: COMMUNITY CENTER
HARBOR PARK APARTMENTS
969 PORTER STREET, VALLEJO, CA 94560

DRAWING TITLE: **TITLE SHEET**

Date:	04/17/2012
Scale:	AS NOTED
Drawn:	STAFF
Checked:	RY
Job No.:	2011-09
Sheet:	**A0.0**
Of	Sheets

Jan 22, 2014 - 10:37am Z:\Year 2011 Jobs\2011-09.3 - Community Bldg\Drawings\Architectural\A0.0_080812 - Title Sheet.dwg

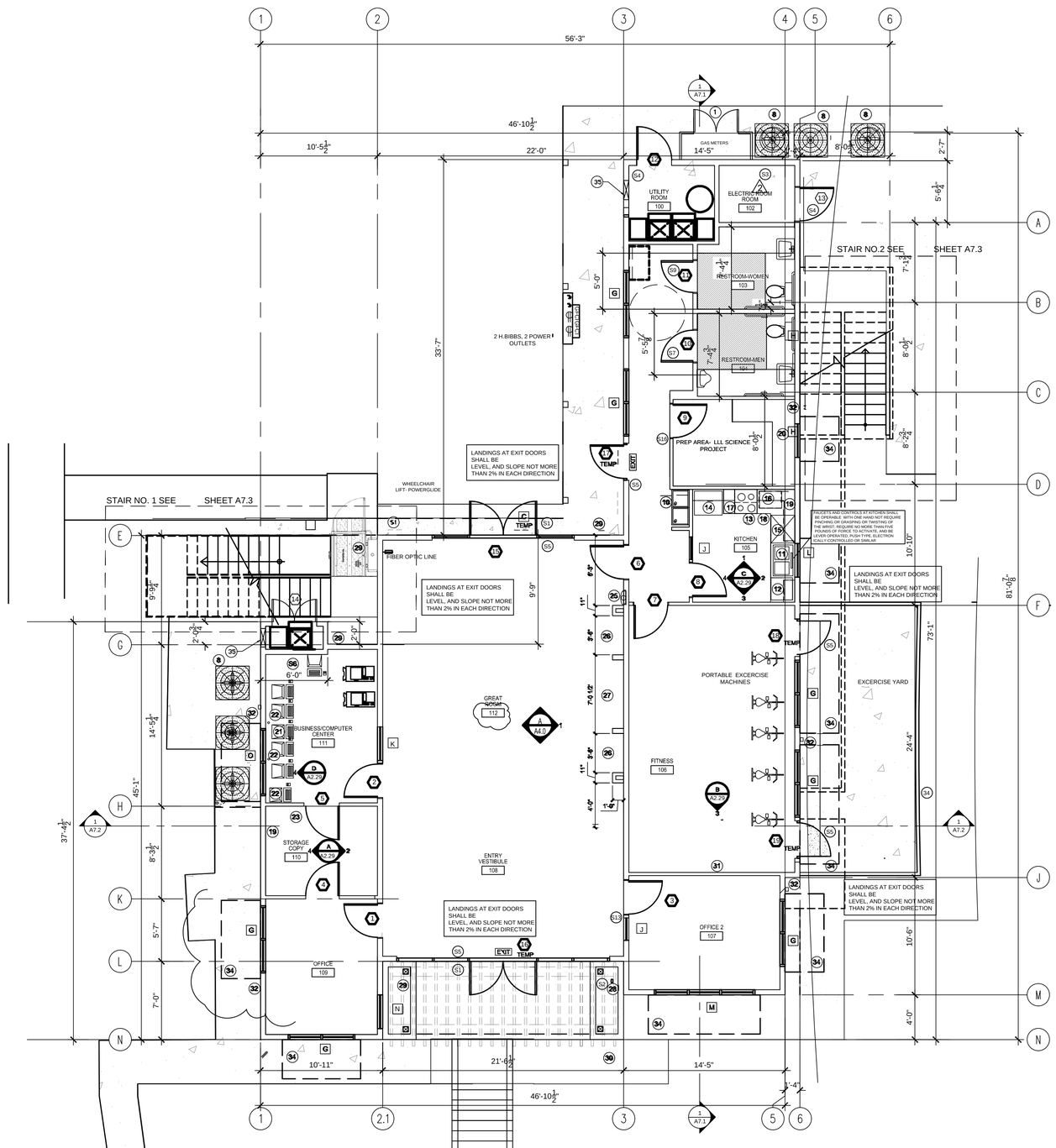

COMMON AREA SIGN NOTES

- **S1** INSTALL SIGN DISPLAYING INTERNATIONAL SYMBOL OF ACCESSIBILITY @ 60" A.F.F. AT EACH BUILDING ENTRANCE
- **S2** PROVIDE TACTILE SIGN WITH THE WORDS "COMMUNITY BUILDING" 60" A.F.F. ON THE LATCH SIDE OF THE DOOR SHOWN.
- **S3** PROVIDE SIGN STATING "FIRE ALARM CONTROL PANEL" (VERIFY EXACT WORDING AND LOCATION WITH CITY OF VALLEJO FIRE DEPARTMENT)
- **S4** PROVIDE SIGN WITH THE WORDS "UTILITY ROOM @ 60" A.F.F. ON THE LATCH SIDE OF THE DOOR.
- **S5** PROVIDE TACTILE EXIT SIGN WITH THE WORDS "EXIT" @ 60" A.F.F. ON THE WALL ADJACENT TO THE LATCH SIDE OF A SINGLE-LEAF DOOR OR ON THE ADJACENT RIGHT WALL OF A DOUBLE-LEAF DOOR (CBC 10011.3, CBC 1117B.5.7)
- **S6** PROVIDE TACTILE SIGN WITH THE WORDS "UTILITY ROOM. @ 60" A.F.F. ON THE LATCH SIDE OF THE DOOR.
- **S7** PROVIDE TACTILE SIGN WITH THE WORDS "MEN" 60" A.F.F. ON THE LATCH SIDE OF THE DOOR SHOWN. SEE DOOR SCHEDULE FOR ADDITIONAL REQUIREMENTS.
- **S8** PROVIDE TACTILE SIGN WITH THE WORDS "WOMEN" 60" A.F.F. ON THE LATCH SIDE OF THE DOOR SHOWN. SEE DOOR SCHEDULE FOR ADDITIONAL REQUIREMENTS.
- **S9** PROVIDE SIGN WITH THE WORDS "STORAGE" 60" A.F.F. ON THE LATCH SIDE OF THE DOOR.
- **S10** PROVIDE SIGN WITH THE WORDS "BUSINESS CENTER" 60" A.F.F. ON THE LATCH SIDE OF THE DOOR.
- **S11** PROVIDE SIGN WITH THE WORDS "STORAGE / COPY" 60" A.F.F. ON THE LATCH SIDE OF THE DOOR.
- **S12** PROVIDE SIGN WITH THE WORDS "OFFICE 1" 60" A.F.F. ON THE LATCH SIDE OF THE DOOR.
- **S13** PROVIDE SIGN WITH THE WORDS "OFFICE 2" 60" A.F.F. ON THE LATCH SIDE OF THE DOOR.
- **S14** PROVIDE SIGN WITH THE WORDS "FITNESS" 60" A.F.F. ON THE LATCH SIDE OF THE DOOR.
- **S15** PROVIDE SIGN WITH THE WORDS "KITCHEN" 60" A.F.F. ON THE LATCH SIDE OF THE DOOR.
- **S16** PROVIDE SIGN WITH THE WORDS "LL SCIENCE PROJECT THE LATCH SIDE OF THE DOOR.

TACTILE EXIT SIGN DETAILS

THE MINIMUM CHARACTER HEIGHT SHALL BE 5/8"
PLUS ⅛" PER FOOT OF VEIWING DISTANCE ABOVE 72"

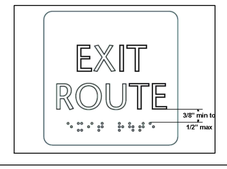

KEYNOTES

1. METAL FENCE GAS METER ENCLOSURE. SEE NORTH ELEVATION
2. LIGHTING CONTROL PANEL, SEE ELECTRICAL DRAWINGS
3. SEE E ELECTRICAL DWGS FOR TELEPHONE PANEL LOCATION
4. FIRE SPRINKLER RISER
5. WATER HEATER, SEE MECH. DWGS
6. SEE MECHANICAL DWGS. FOR HVAC UNITS
7. CONDENSER
8. PAIR 2'-0" WIDE X 6' HIGH METAL GATES
9. HANDICAPED ACCESSIBLE DRINKING FOUNTAIN. PROVIDE HIGH AND LOW DRINKING FOUNTAIN
10. DOUBLE SINK AND GARBAGE DISPOSAL. COMPLY WITH CBD 1115B.4.7(2)
11. DISHWASHER
12. RANGE AND OVEN
13. REFRIGERATOR WITH WATER SUPPLY FOR ICEMAKER
14. 30" MIN. CLR. SPACE BELOW COUNTER
15. MICROWAVE
16. RANGE HOOD, AND FAN. MOUNT CONTROLS AT 44" ABOVE FIN. FLR.
17. BASE CABINETS
18. UPPER CABINETS
19. 60" DIAMETER FOR ADA ACCESS
20. COUNTER
21. HOLES FOR DATA CABLES
22. COPIER LOCATION
23. FILE CABINET LOCATION
24. RECESSED FIRE EXTINGUISHER (PORTABLE) – TYPICAL ONE 2A–10BC TYPE AT LOCATIONS SHOWN
25. ADJUSTABLE OPEN SHELVES
26. TV/VIDEO GAME SPACE
27. FIRE DEPARTMENT KNOX BOX.
28. not used
29. WOOD TRELLIS
30. 8' WALL MOUNTED MIRROR
31. ROOF DOWNSPOUTS
32. FABRIC AWNING
34. 6' HIGH WOOD FENCE SEE DETAIL SHEET A9.4
35. 16X16 WALL LOUVERS II AT 12 ABOVE FLOR, 12" BELOW CEILING

GENERAL NOTES

B. ALL DIMENSIONS ARE TO FACE OF STUD OR CENTERLINE OF PARTITION WALL, INTERIOR COLUMN/ WINDOW/ DOOR UNLESS OTHERWISE NOTED.

C. DETAILS ARE KEYED AND NOTED 'TYPICAL' ONLY ONCE ON THE PLANS WHEN THEY FIRST OCCUR, AND ARE REPRESENTATIVE OF SIMILAR CONDITIONS THROUGHOUT, UNLESS OTHERWISE NOTED.

D. PROVIDE WATER–RESISTANT GYP. BOARD AT ALL WET WALL LOCATIONS.

E. FOR DOOR AND WINDOW KEYS REFER TO DOOR AND WINDOW SCHEDULE. SEE A9.1

F. REFER TO INTERIOR ELEVATION FOR CABINETS CALLOUTS. SEE SHEET A2.3, A2.4 & A2.5.

G. FOR ALL TOILETS ACCESSORIES & HEIGHTS REFER TO A2.3, A2.4 & A2.5

H. FOR FINISH FLOOR REFER TO FINISH SCHEDULE A4.1.

I. PROVIDE ACOUSTICAL SEALANT AT ALL WALLS AND CEILING CONDITION.

J. PROVIDE 5/8" THK. GYP. BD. MOISTURE RESISTANT AT WET AREAS , BATHROOMS & KITCHEN SINK AREA.

K. PROVIDE WD. BLOCKING BEHIND GYPSUM BD. PARTITION FOR ATTACHMENT FOR ALL FIXTURE, FITTINGS, ART WORK & ACCESSORIES.

L. PROVIDE WD. BLOCKING AT CEILING FOR BLINDS AT WINDOW WHERE REQUIRED.

M. GROUND AND FLOOR SURFACES AT ACCESSIBLE ROUTES TO BE SLIP RESISTANCE PER CBC. 1124.B

N. SLOPE FLOOR DRAIN ¼"=1'–0 SEE PLUMBING DWGS.

O. PROVIDE WD BLOCKING IN WALL AT GRAB BAR, CABINETS, SHELVES, AND CEILINGS AS

P. REQUIRED FOR WINDOW SHADING.

PLYWOOD SHEAR WALL TO EXTEND FULL HEIGHT OF THE WALL. SSD.

Q. INTERIOR FINISHES CEILINGS & WALLS SHALL BE CLASSIFIED W/ASTME 84–TYPE "C" FLAMED SPREAD 76–200, SMOKE DEVELOPED AT 0–450. TESTED W/NFPA 286

R. INTERIOR TRIM SHALL HAVE A MIN. CLASS C FLAMED SPREAD & SMOKE DEVELOP INDEX WHEN TESTED W/ASTME–84 AND NOT TO EXCEED 10% OF AGGREGATE WALL OR CLG.

REFER TO SHEET AX.OX FOR WALL TYPE LEGEND

LEGEND

- ONE HOUR RATED WALL. SEE DETAIL SHEET X/XX
- INTERIOR FULL HT. PARTITION. SEE DETAIL SHEET X.XX
- INTERIOR BEARING PARTITION WALL. SEE DETAIL SHEET X.XX
- FIRE EXTINGUISHER

DRAWINGS FOR REVIEW AND BIDDING PURPOSES ONLY-NOT FOR CONSTRUCTION. SUBMIT RFI FOR CONFLICTS OR INFORMATION NOT SHOWN

PLAN NORTH

COMMUNITY CENTER FIRST FLOOR PLAN

01 SCALE: 3/16" = 1'-0"

REVISIONS	BY
9/26/2011 – PLAN CHECK	G.O.
11/20/2013– GAS METER	STAFF
1/20/2014 BIDDING	STAFF
WINDOW, DOOR MARKS ADDED	
WINDOW, DOOR MARKS ADDED DOORS MODIFIED., FLOR FINISHES CHANGED	

LICENSED ARCHITECT JOSEPH OAKLEY JR. No. 13457 REN. 9–30–14 STATE OF CALIFORNIA

OAKLEY & OAKLEY
ARCHITECT,CIVIL & STRUCTURAL ENGINEERS
2700 - EDGEWATER DRIVE,SUITE 615
P.O. BOX 4621
VALLEJO, CA 94590
510-562-6028
FAX 510-562-6043

PROJECT TITLE: COMMUNITY CENTER
HARBOR PARK APARTMENTS
969 PORTER STREET, VALLEJO, CA 94560

DRAWING TITLE: **FIRST FLOOR PLAN**

Date:	08/30/2011
Scale:	AS NOTED
Drawn:	STAFF
Checked:	RY
Job No.:	2011–09
Sheet:	A2.1
Of	Sheets

Jan 27, 2014 – 3:29pm \\SERVER\Server Drive D\Year 2011 Jobs\2011-09.3 – Community Bldg\REVISED DRAWINGS FOR NEGOTIATED CONTRACT WITH WE LYONS\ARCHITECTUA2.01 – 1st Floor Plan 1-27-2014 FOR DOOR SCHEDULE BY WELYONSREVISED-CURRENT.dwg

ACCESSIBILTY NOTES

29. BASE CABINETS WITH "BASELIFT" ADJUSTABLE SINK AND COUNTER. PROVIDE VINYL FINISH FLOOR.
30. BASE COUNTER TOP SHALL BE ADJUSTABLE TO 28" MINIMUM HEIGHT (SLIMLIFT OR EQUAL)
31. PROVIDE MINIMUM 30" X 48" CLEAR SPACE AT TUB FOR ACCESSIBILITY
32. GRAB BARS, AND SUPPORTS SHALL BE ABLE TO SUPPORT 250 POUND FORCE.
33. MOUNT ALL RECEPTACLE OUTLETS BETWEEN 15" AND 48" ABOVE FINISH FLOOR.
34. MOUNT ALL SWITCHES, THERMOSTATS, AND OTHER CONTROLS BETWEEN 15" AND 48 INCHES ABOVE FINISH FLOOR
35. BASE CABINETS UNDER SINK CABINET AREA, INCLUDING TOEBOARD, AND SHELVING SHALL BE REMOVABLE WITHOUT THE USE OF SPECIALIZED TOOLS OR SPECIALIZED KNOWLEDGE TO PROVIDE CLEARANCE FOR A WHEELCHAIR. FINISHED FLOORING SHALL BE PROVIDED BENEATH THE COUNTER TOP.
36. PROVIDE A PERMANENTLY WIRED DOORBELL MOUNTED 48" ABOVE THE FLOOR AT MAIN ENTRY TO UNIT A, ACCESSIBLE UNIT

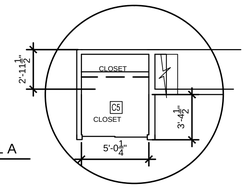

DETAIL A

KEYNOTES

01 BASE CABINETS.
02 UPPER CABINETS
03 BACK SPLASH
04 P. LAM, FINISH.
05 DOUBLE SINK. MIN. 30" SPACE BELOW COUNTER
06 WOOD TRIM
07 PAPER TOWEL DISPENSER
08 BLOCK OUT WALL
09 TOILET TISSUE DISPENSER
10 CERAMIC TILE
11 MIRROR
12 RANGE HOOD
13 CONVENTIONAL OVEN/STOVE
14 ACCESSIBLE REFRIGERATOR 30" MIN. CLR.
15 FLOOR MOUNTED TOILET
16 FLOOR DRAIN
17 SOLID WOOD DOOR, SEE SHEET A15.1
18 COUNTER TOP MICROWAVE
19 DISHWASHER
20 SINK. SPD
21 TUB. SPD
22 SHOWER (STERLING MODEL 71150115-0 AT ADA UNIT)

INTERIOR STAIR NOTES

23 STAIR SHALL HAVE CLOSED VERTICAL RISERS.
24 THERE SHALL BE NO NOSING AT TREADS
25 PROVIDE SLIP RESISTANT TREADS OR CARPET FINISH
26 HANDRAILS ARE SHOWN AT EA. SIDE OF STAIRWAYS
27 HANDRAILS SHALL BE MOUNTED 34 TO 38 INCHES ABOVR TOP OF END OF TREAD
28 HANDRAILS SHALL BE 1.5" IN DIA, AND TERMINATE ION SAFETY TERMINALS. SEE 6/S5.1 FOR MOUNTING DETAIL

RISER CALCULATIONS:

GROUND FLOOR TO SECOND FLOOR
12'-7"=151" 151 /7 =21.57 USE 22 RISERS

SECOND FLOOR TO THIRD FLOOR
9'-1" + 15.875" FLOOR + 3.5" SHIM =128.375"
128.375 / 7.75 =16.5645 RISERS USE 17 RISERS @ 7.5691"

GENERAL NOTES

A. ALL DIMENSIONS ARE TO FACE OF STUD OR CENTERLINE OF PARTITION WALL, INTERIOR COLUMN/ WINDOW/ DOOR UNLESS OTHERWISE NOTED.
B. DETAILS ARE KEYED AND NOTED 'TYPICAL' ONLY ONCE ON THE PLANS WHEN THEY FIRST OCCUR, AND ARE REPRESENTATIVE OF SIMILAR CONDITIONS THROUGHOUT, UNLESS OTHERWISE NOTED.
C. PROVIDE WATER-RESISTANT GYP. BOARD AT ALL WET WALL LOCATIONS.
D. FOR DOOR AND WINDOW KEYS REFER TO DOOR AND WINDOW SCHEDULE. SEE A9.1 REFER TO INTERIOR ELEVATION FOR CABINETS CALLOUTS. SEE SHEET A2.3, A2.4 & A2.5.
E. FOR ALL TOILETS ACCESSORIES & HEIGHTS REFER TO A2.3, A2.4 & A2.5
F. FOR FINISH FLOOR REFER TO FINISH SCHEDULE A4.1.
G. PROVIDE ACOUSTICAL SEALANT AT ALL WALLS AND CEILING CONDITION.
H. PROVIDE 5/8" THK. GYP. BD. MOISTURE RESISTANT AT WET AREAS , E RESTROOMS, LAUNDRY AREA, CLASS RESTROOM, & KITCHEN SINK AREA.
I. PROVIDE WD. BLOCKING BEHIND GYPSUM BD. PARTITION FOR ATTACHMENT FOR ALL FIXTURE, FITTINGS, ART WORK & ACCESSORIES.
J. PROVIDE WD. BLOCKING AT CEILING FOR BLINDS AT WINDOW WHERE REQUIRED.
K. PROVIDE TACKTILE SIGN AT EXIT DOORS WITH THE WORD "EXIT" PER CBC. 1011.3.
L. GROUND AND FLOOR SURFACES AT ACCESSIBLE ROUTES TO BE SLIP RESISTANCE PER CBC. 1124.B
M. SLOPE FLOOR DRAIN ¼"=1'-0 SEE PLUMBING DWGS.
N. PROVIDE WD BLOCKING IN WALL AT GRAB BAR, CABINETS, SHELVES, AND CEILINGS AS REQUIRED FOR WINDOW SHADING.
O. PLYWOOD SHEAR WALL TO EXTEND FULL HEIGHT OF THE WALL. SSD.
P. INTERIOR FINISHES CEILINGS & WALLS SHALL BE CLASSIFIED W/ASTME 84-TYPE "C" FLAMED SPREAD 76-200, SMOKE DEVELOPED AT 0-450. TESTED W/NFPA 286
Q. INTERIOR TRIM SHALL HAVE A MIN. CLASS C FLAMED SPREAD & SMOKE DEVELOP INDEX WHEN TESTED W/ASTME-84 AND NOT TO EXCEED 10% OF AGGREGATE WALL OR CLG.
R. SEE ROOF PLAN FOR DOWNSPOUT LOCATIONS
S WALK DECK SHALL BE DEXOTEX ELASTOTEX 500 URETHANE DECK OR EQUAL USE SLOPED SHAPED INSULATION BOARDS TO OBTAIN SLOPE AT ROOF DECK.

LEGEND

ONE HOUR RATED WALL
INTERIOR FULL HT. PARTITION
INTERIOR BEARING PARTITION WALL
FIRE EXTINGUISHER

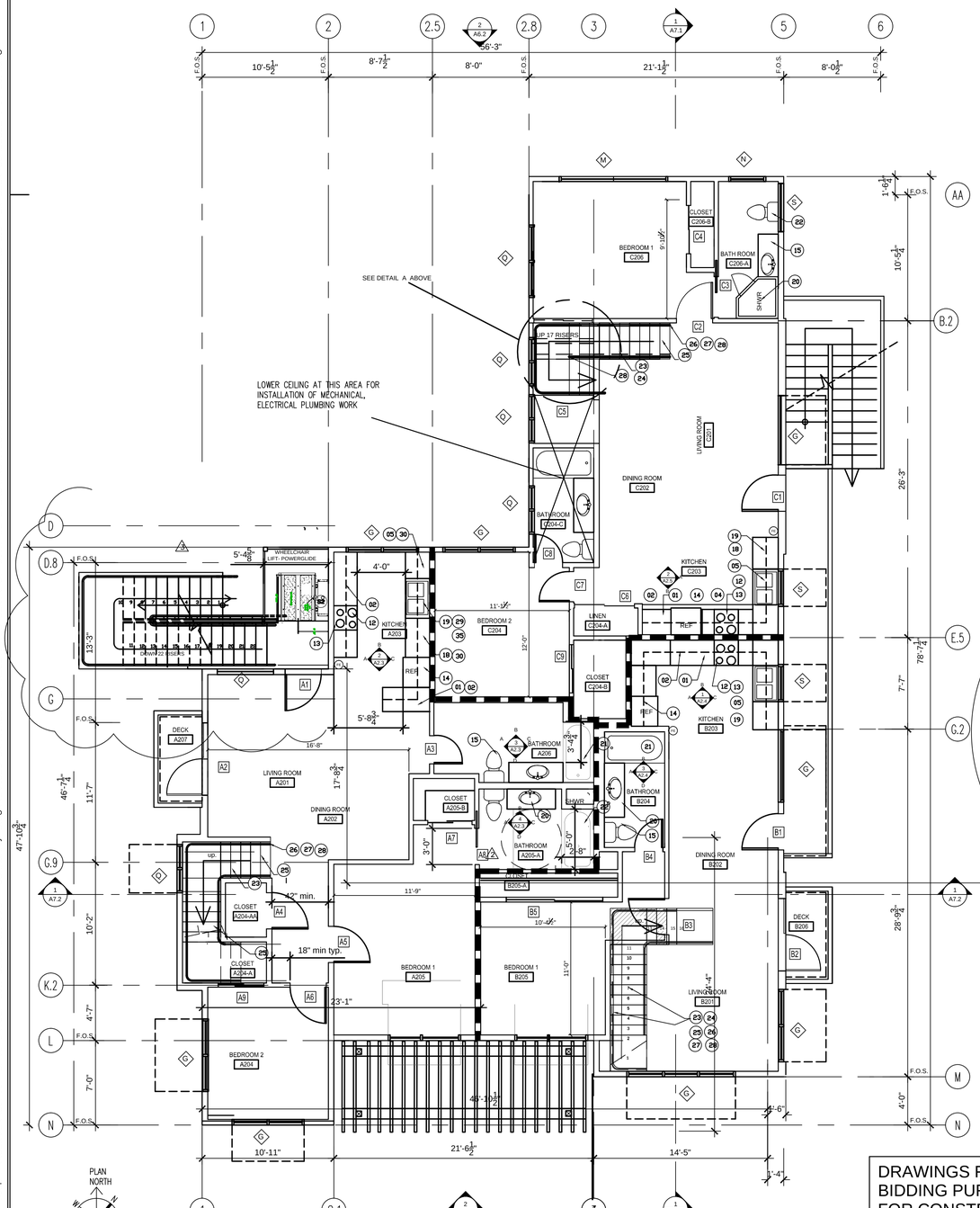

01 COMMUNITY CENTER SECOND FLOOR PLAN

SEE ACCESSIBILTY NOTE 29 THROUGH F0R ACCESSIBLE UNIT A

DRAWINGS FOR REVIEW AND BIDDING PURPOSES ONLY-NOT FOR CONSTRUCTION. SUBMIT RFI FOR CONFLICTS OR INFORMATION NOT SHOWN

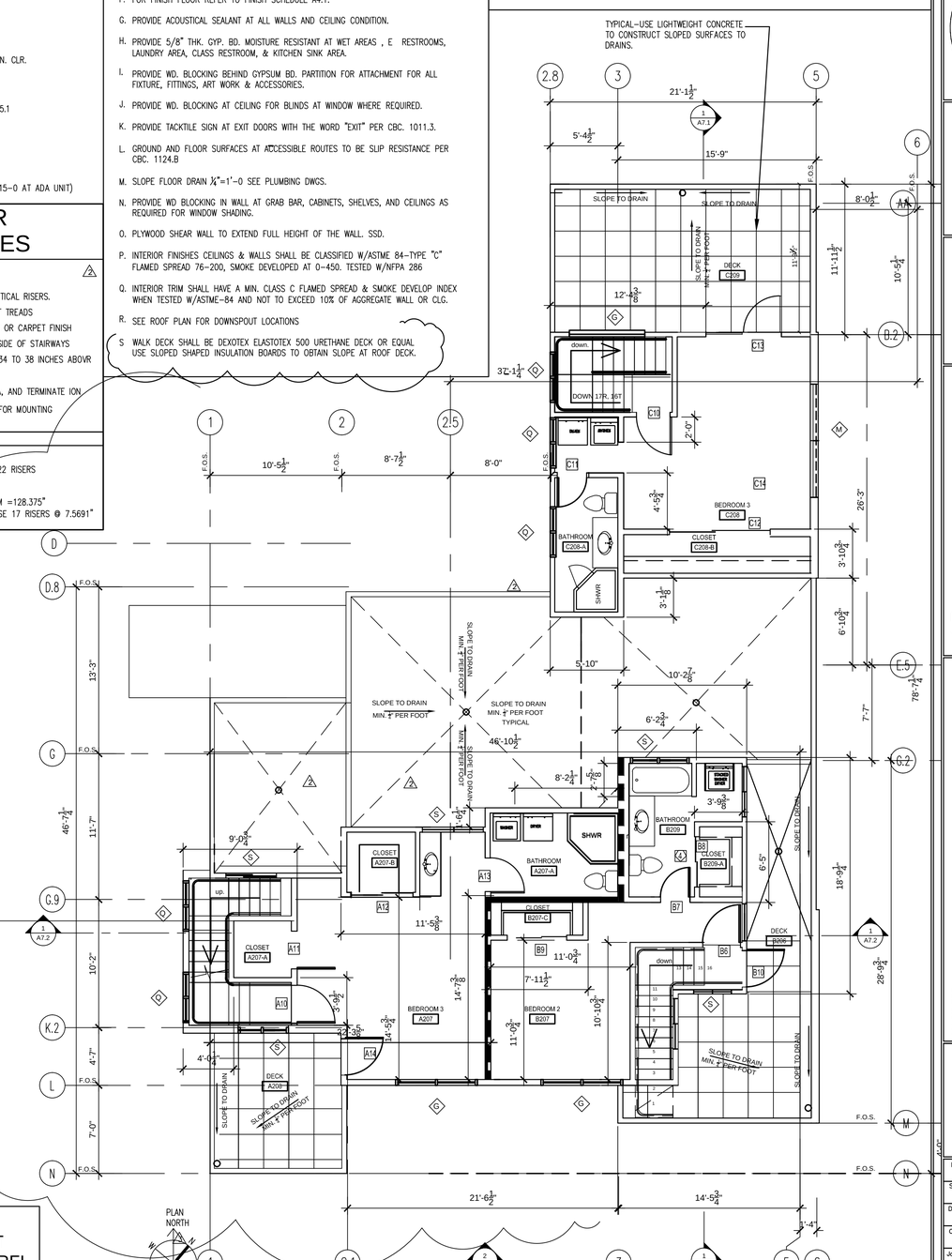

02 COMMUNITY CENTER THIRD FLOOR PLAN

REVISIONS	BY
9/26/2011 – PLAN CHECK	G.O.
2/13/2012– REVISIONS	STAFF
1-08-14 ROOF DRAINAGE	STAFF
1-08-14 STAIRWAYS	

LICENSED ARCHITECT JOSEPH OAKLEY No. 15457 REN. 9-30-15 STATE OF CALIFORNIA

OAKLEY & OAKLEY
ARCHITECTURAL ENGINEERS
7700 EDGEWATER DRIVE
OAKLAND, CA 94621
TEL. 510 562 6043
FAX. 510 562 6043

PROJECT TITLE: COMMUNITY CENTER
HARBOR PARK APARTMENTS
969 PORTER STREET, VALLEJO, CA 94560

DRAWING TITLE: **SECOND FLOOR PLAN**

Date:	01/12/2011
Scale:	3/16 = 1;-0"
Drawn:	STAFF
Checked:	RY
Job No.:	2011-09
Sheet:	A2.21

Jan 27, 2014 - 4:03pm \\SERVER\Server Drive D\Year 2011 Jobs\2011-09.3 - Community Bldg\REVISED DRAWINGS FOR NEGOTIATED CONTRACT WITH WE LYONS\ARCHITECTUA2.21-A2.25-REVISIED FOR WELYONS BID FOR DOOR SCHEDULE 1-14-2014.dwg

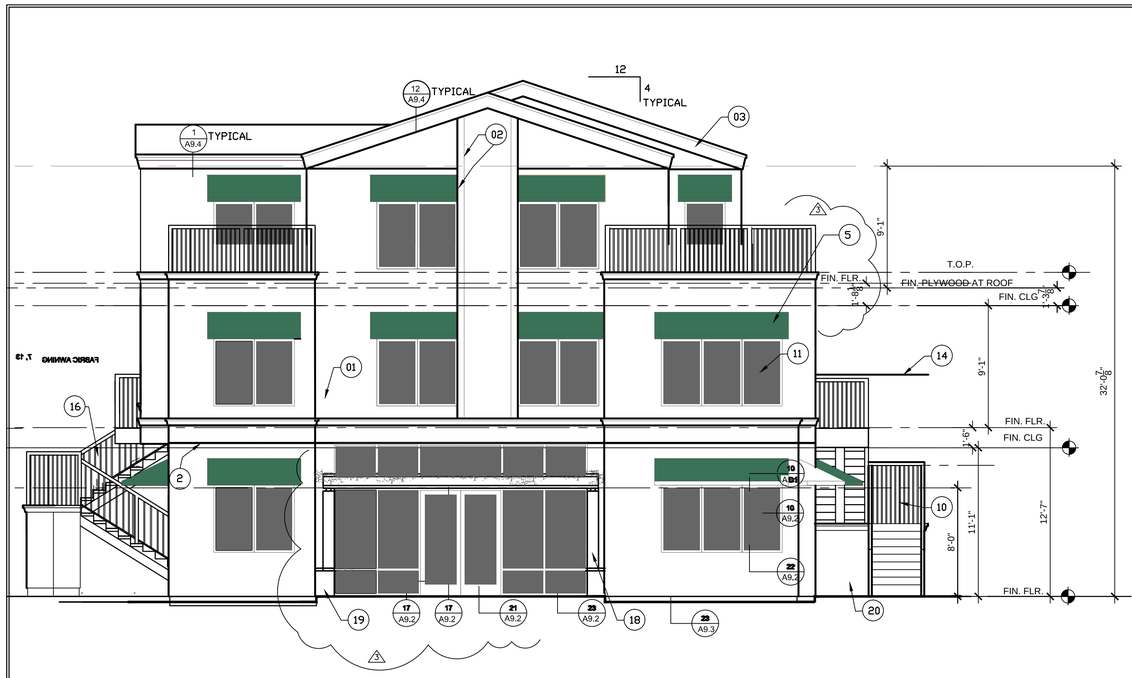

FRONT ELEVATION (SOUTH)

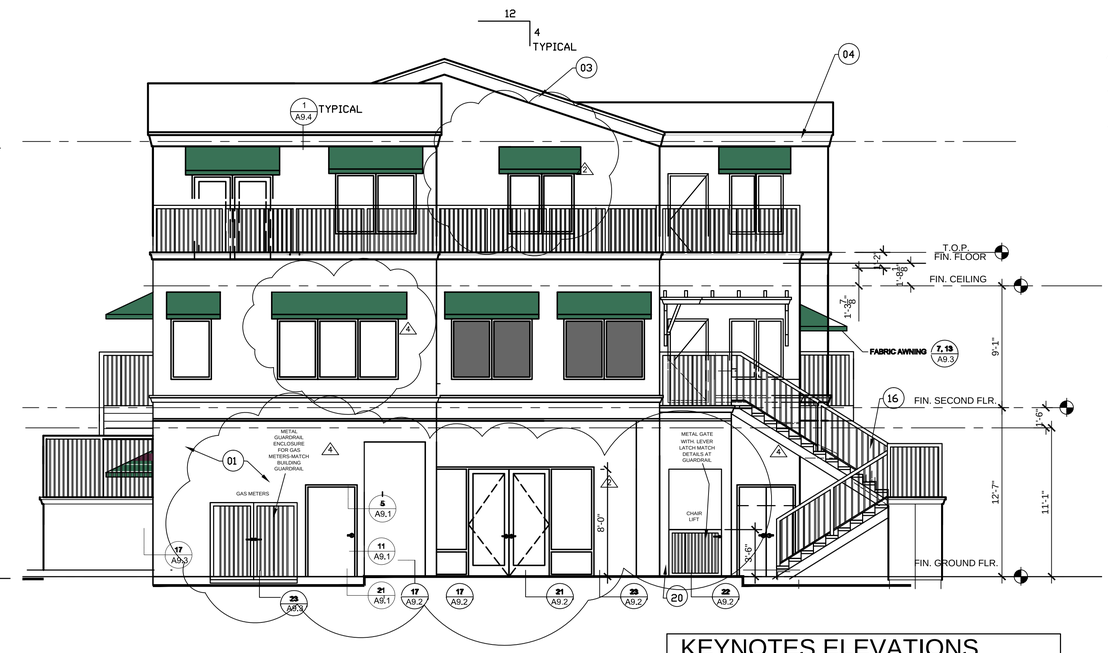

NORTH ELEVATION

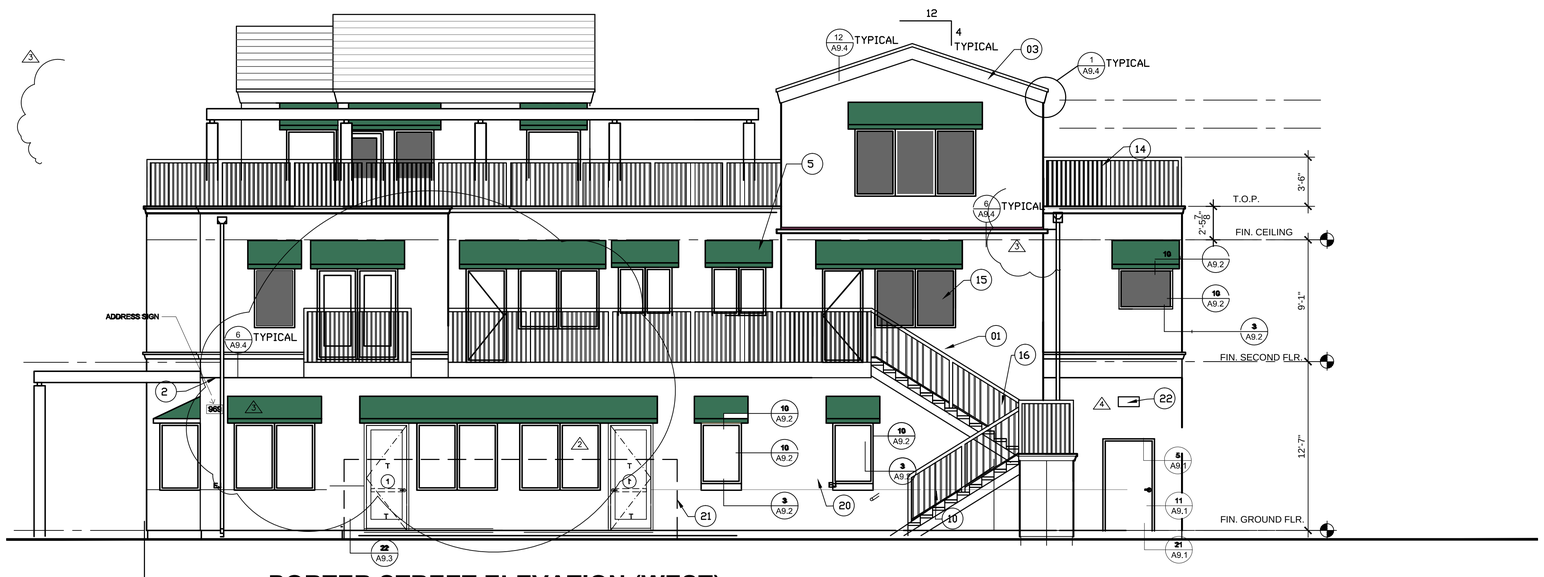

PORTER STREET ELEVATION (WEST)

DRAWINGS FOR REVIEW AND BIDDING PURPOSES ONLY-NOT FOR CONSTRUCTION. SUBMIT RFI FOR CONFLICT OR INFORMATION NOT SHOWN

01 COMMUNITY CENTER EXTERIOR ELEVATIONS

KEYNOTES ELEVATIONS

01 3 COATS OF CEMENT PLASTER SYSTEM WITH ACRYLIC FINISH
02 2" ALUMINUM REVEAL
03 EPS TRIM G.I. CAPPING
04 EPS TRIM
05 FABRIC AWNING
06 G.I. SCUPPER CONDUCTOR
07 METAL & WOOD TRELLIS
08 METAL STAIRS
09 WOOD TRELLIS
10 METAL STAIRS
11 VINYL WINDOW. SEE WINDOW SCHEDULE
12 ALUMINUM STOREFRONT SYSTEM . SEE WINDOW SCHEDULE
13 EXTERIOR WOOD DOORS, SEE DOOR SCHEDULE
14 STEEL RAILING.
15 VINYL WINDOW
16 MTL. RAILING.
17 LOUVER DOOR
18 WOOD COLUMN
19 PLANTER BOX.
20 WHEEL CHAIR LIFT
21 6' WOOD FENCE-SELECTION BY OWNER
22 EXHAUST FAN OUTLET

GENERAL NOTES

A. ALL DIMENSIONS ARE TO FACE OF STUD OR CENTERLINE OF PARTITION WALL, INTERIOR COLUMN/ WINDOW/ DOOR UNLESS OTHERWISE NOTED.

B. DETAILS ARE KEYED AND NOTED 'TYPICAL' ONLY ONCE ON THE PLANS WHEN THEY FIRST OCCUR, AND ARE REPRESENTATIVE OF SIMILAR CONDITIONS THROUGHOUT, UNLESS OTHERWISE NOTED.

C. FOR DOOR AND WINDOW KEYS REFER TO DOOR AND WINDOW SCHEDULE.

LEGEND

ONE HOUR RATED WALL
INTERIOR FULL HT. PARTITION
INTERIOR BEARING PARTITION WALL
EPS TRIM – MOLDING

REVISIONS	BY
9/26/2011 – PLAN CHECK	G.O.
1/ 08 / 14 BIDDING	T.O.
2 GUADRAIL AND WINDOWS REVISION	
3 PARAPET RAISED FOR BUILT UP ROOF, 9'-9" CLG., 7"	
STOREFRONT DOORS, WINDOWS REVISED	
4 BIDDING REVISION	

LICENSED ARCHITECT
JOSEPH OAKLEY JR.
No. 15457
REN. 9-30-15
STATE OF CALIFORNIA

OAKLEY & OAKLEY
ARCHITECT, CIVIL & STRUCTURAL ENGINEERS
7700 EDGEWATER DRIVE, STE 15
OAKLAND, CA 94621
510 562 6043
FAX 510 562 6043

PROJECT TITLE:
COMMUNITY CENTER
HARBOR PARK APARTMENTS
969 PORTER STREET, VALLEJO, CA 94560

DRAWING TITLE:
SECOND FLOOR PLAN

Date:	08/30/2011
Scale:	3/16" = 1'-0"
Drawn:	STAFF
Checked:	RY
Job No.:	2011-09
Sheet:	A2.24
Of	Sheets

Jan 27, 2014 - 4:05pm \\SERVER\Server Drive D\Year 2011 Jobs\2011-09.3 - Community Bldg\REVISED DRAWINGS FOR NEGOTIATED CONTRACT WITH WE LYONS\ARCHITECTURE\21-A2.25-REVISIED FOR WELYONS BID FOR DOOR SCHEDULE 1-14-2014.dwg

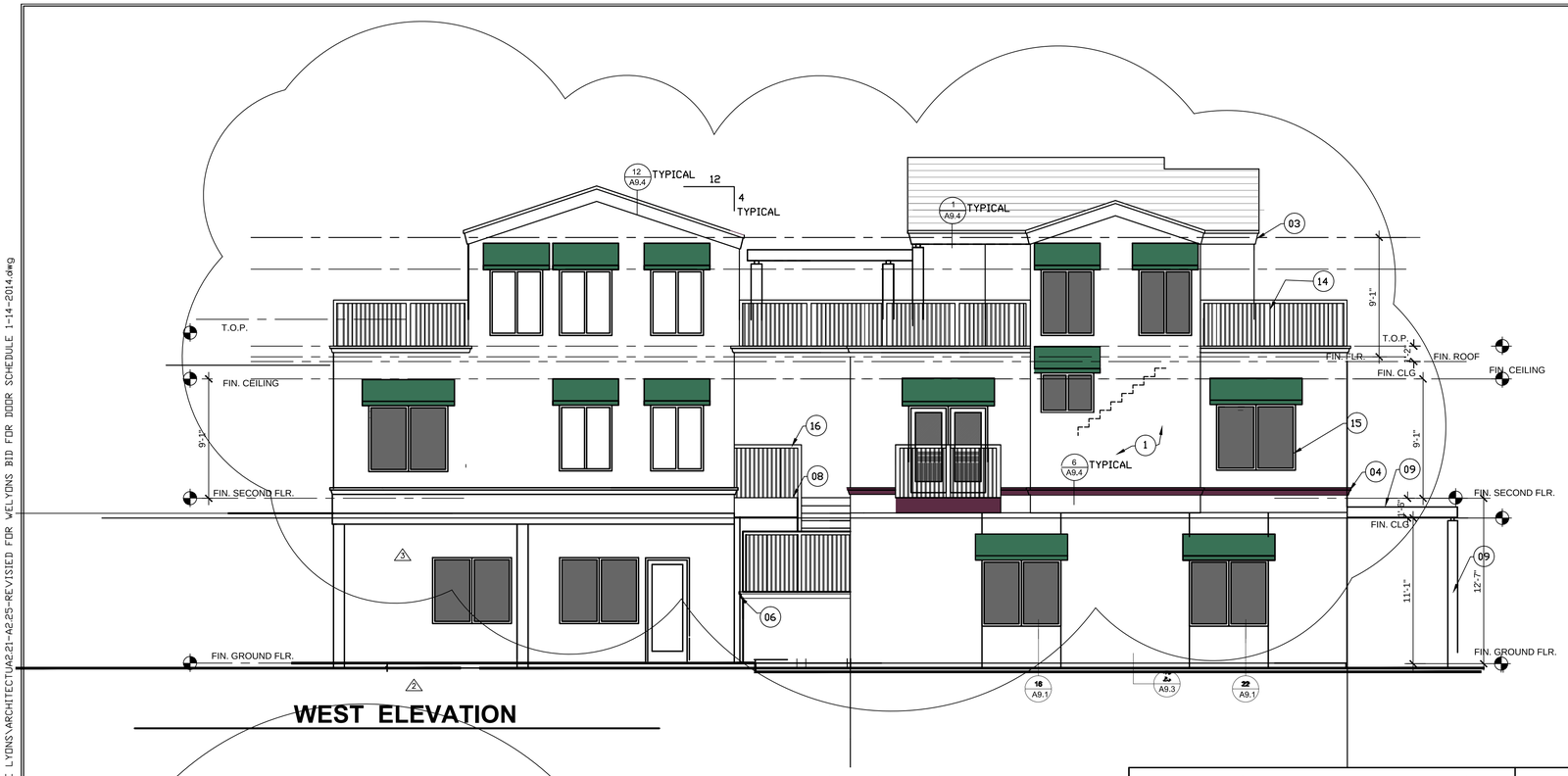

WEST ELEVATION

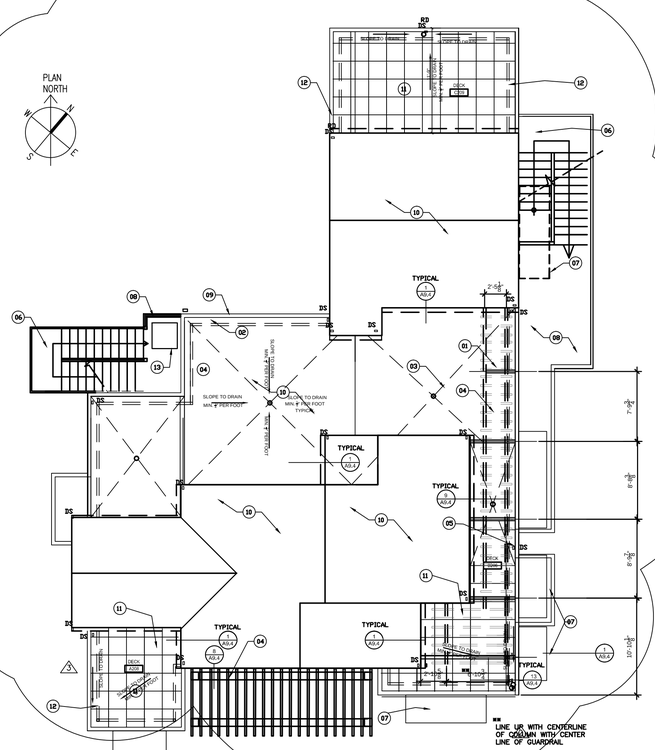

COMMUNITY CENTER ROOF PLAN

01

SCALE 1/8" = 1'-0" SEE SHEET A2.26 FOR ENLARGED ROOF PLAN

KEYNOTES ROOF PLAN

01 ROOF CRICKET.
02 ROOF LINE OF PARAPET.
03 BUILT UP ROOF WITH 90 LB. CAP SHEET
CLASS B ROOF SYSTEM. PROVIDE MIN.1/4" SLOPE @ VALLEY
04 TRELLIS W/ WOOD FRAME WITH STEEL POSTS
05 THROUGH WALL SCUPPER AND 3X4 DOWN SPOUT. TERMINATE AT DOWNSPOUT AT SPLASH BLOCK.
06 EXTERIOR STAIRS BELOW
07 FABRIC AWNING BELOW.
08 DECKING BELOW.
09 CORNICE AT EDGE OF PARAPET.
10 ASPHALT SHINGLE ROOF
11 ROOF DECK
12 METAL RAIL
13 CHAIR LIFT

GENERAL NOTES

A. ALL RAIN WATER LEADERS & DOWNSPOUT BE CONNECTED TO STORM DRAIN SYSTEM.

B. ALL DIMENSIONS ARE TO FACE OF STUDS OR CENTER OF COLUMN LINE AS APPLICABLE, UON

LEGEND

CRICKET. SEE DET. SHEET A9.3

WHEELCHAIR LIFT DETAILS

AmeriGlide

AmeriGlide Hercules II VPL Typical Drawing
Left Hand Shown; Right Hand is Opposite
Right Hand Platform Gate Shown

Model	X	Y
AG400	77	53
AG600	101	77
AG800	125	101
AG1000	149	125
AG1200	173	149

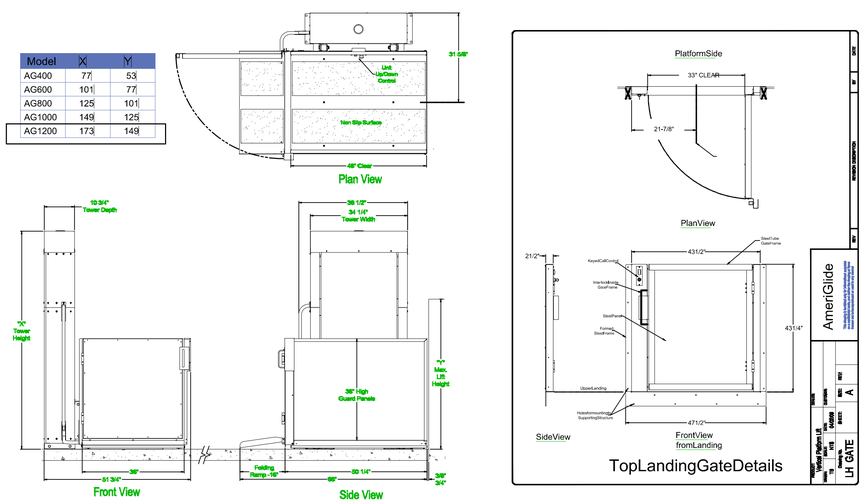

DRAWINGS FOR REVIEW AND BIDDING PURPOSES ONLY-NOT FOR CONSTRUCTION. SUBMIT RFI FOR CONFLICTS OR INFORMATION NOT SHOWN

KEYNOTES ELEVATIONS

01 3 COATS OF CEMENT PLASTER SYSTEM
02 2" ALUMINUM REVEAL
03 EPS TRIM G.I. CAPPING
04 EPS TRIM
05 FABRIC AWNING
06 G.I. SCUPPER CONDUCTOR
07 METAL & WOOD TRELLIS
08 METAL STAIRS
09 WOOD TRELLIS
10 METAL STAIRS
11 VINYL WINDOW. SEE WINDOW SCHEDULE
12 ALUMINUM STOREFRONT SYSTEM . SEE WINDOW SCHEDULE
13 EXTERIOR WOOD DOORS, SEE DOOR SCHEDULE
14 STEEL RAILING.
15 VINYL WINDOW
16 MTL. RAILING.
17 LOUVER DOOR
18 STL. COLUMN. SED
19 PLANTER BOX.

GENERAL NOTES

A. ALL DIMENSIONS ARE TO FACE OF STUD OR CENTERLINE OF PARTITION WALL, INTERIOR COLUMN/ WINDOW/ DOOR UNLESS OTHERWISE NOTED.

B. DETAILS ARE KEYED AND NOTED "TYPICAL" ONLY ONCE ON THE PLANS WHEN THEY FIRST OCCUR, AND ARE REPRESENTATIVE OF SIMILAR CONDITIONS THROUGHOUT, UNLESS OTHERWISE NOTED.

C. FOR DOOR AND WINDOW KEYS REFER TO DOOR AND WINDOW SCHEDULE.

LEGEND

ONE HOUR RATED WALL
INTERIOR FULL HT. PARTITION
INTERIOR BEARING PARTITION WALL
EPS TRIM – MOLDING

REVISIONS	BY
9/26/2011 – PLAN CHECK	G.O.
1/09/2014	STF
GUARDAIL REVISED	
1/09/2014	
REVISED ROOF DRAINAGE	
1-10-2014	
REVISED ROOF DRAINAGE, WINDOWS AT HALLWAY	

LICENSED ARCHITECT JOSEPH OAKLEY No. 15457 REN. 9-30-15 STATE OF CALIFORNIA

OAKLEY & OAKLEY
ARCHITECTS, STRUCTURAL ENGINEERS
710 EDGEWATER DRIVE, SUITE 150
OAKLAND, CA 94621
510.562.6043
FAX 510.562.6043

PROJECT TITLE:
COMMUNITY CENTER
HARBOR PARK APARTMENTS
969 PORTER STREET, VALLEJO, CA 94560

DRAWING TITLE:
LEFT ELEVATION AND ROOF PLAN
CHAIR LIFT DETAILS

Date:	04/10/2012
Scale:	3/16" = 1'-0"
Drawn:	STAFF
Checked:	RY
Job No.:	2011-09
Sheet:	A2.25
Of	Sheets

Jan 27, 2014 - 4:07pm \\SERVER\Server Drive D\Year 2011 Jobs\2011-09.3 - Community Bldg\REVISED DRAWINGS FOR NEGOTIATED CONTRACT WITH WE LYONS\ARCHITECTU\A2.21-A2.25-REVISIED FOR WELYONS BID FOR DOOR SCHEDULE 1-14-2014.dwg

Jan 28, 2014 - 12:27pm \\Server\server drive d\Year 2011 Jobs\2011-093 - Community Bldg\REVISED DRAWINGS FOR NEGOTIATED CONTRACT WITH WE LYONS\ARCHITECTUA2.21-A2.25-REVISED FOR WELYONS BID FOR DOOR SCHEDULE 1-14-2014.dwg

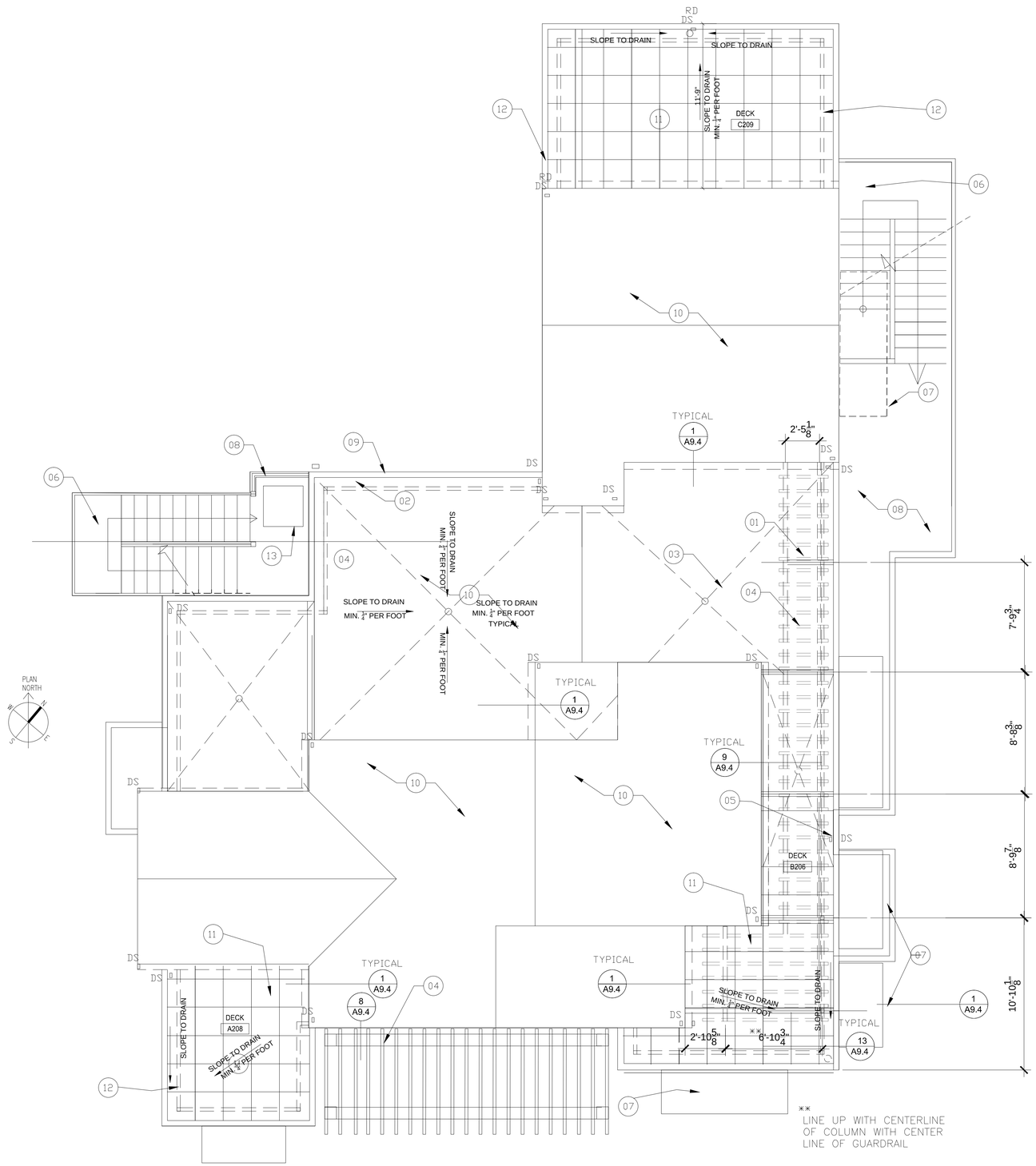

01 COMMUNITY CENTER ROOF PLAN

GENERAL NOTES

A. ALL DIMENSIONS ARE TO FACE OF STUD OR CENTERLINE OF PARTITION WALL, INTERIOR COLUMN/ WINDOW/ DOOR UNLESS OTHERWISE NOTED.

B. DETAILS ARE KEYED AND NOTED 'TYPICAL' ONLY ONCE ON THE PLANS WHEN THEY FIRST OCCUR, AND ARE REPRESENTATIVE OF SIMILAR CONDITIONS THROUGHOUT, UNLESS OTHERWISE NOTED.

C. FOR DOOR AND WINDOW KEYS REFER TO DOOR AND WINDOW SCHEDULE.

LEGEND

- ONE HOUR RATED WALL
- INTERIOR FULL HT. PARTITION
- INTERIOR BEARING PARTITION WALL
- EPS TRIM - MOLDING

KEYNOTES ROOF PLAN

01 BEAM AT ROOF TRELLIS.
02 ROOF LINE OF PARAPET.
03 BUILT UP ROOF WITH 90 LB. CAP SHEET CLASS B ROOF SYSTEM. PROVIDE MIN.¼" SLOPE @ VALLEY
04 TRELLIS W/ WOOD FRAME WITH STEEL POSTS
05 THROUGH WALL SCUPPER AND 3X4 DOWN SPOUT. TERMINATE AT DOWNSPOUT AT SPLASH BLOCK.
06 EXTERIOR STAIRS BELOW
07 FABRIC AWNING BELOW.
08 DECKING BELOW.
09 CORNICE AT EDGE OF PARAPET.
10 ASPHALT SHINGLE ROOF
11 ROOF DECK
12 METAL RAIL
13 CHAIR LIFT

REVISIONS	BY
9/26/2011 - PLAN CHECK	G.O.
1/09/2014	STF
GUARDAIL REVISED	
1/09/2014	
REVISED ROOF DRAINAGE	
1-10-2014	
REVISED ROOF DRAINAGE, WINDOWS AT HALLWAY	
1-26-2014	
ADDED ENLARGED PLAN SHEET	

LICENSED ARCHITECT
JOSEPH OAKLEY
No. 15457
REN. 9-30-15
STATE OF CALIFORNIA

OAKLEY & OAKLEY
ARCHITECTS & STRUCTURAL ENGINEERS
OAKLAND, CA 94621
FAX 510 562 6043

PROJECT TITLE:
COMMUNITY CENTER
HARBOR PARK APARTMENTS
969 PORTER STREET, VALLEJO, CA 94560

DRAWING TITLE:
ENLARGED ROOF PLAN

Date:	04/10/2012
Scale:	3/16" = 1'-0"
Drawn:	STAFF
Checked:	RY
Job No.:	2011-09
Sheet:	A2.26
Of	Sheets

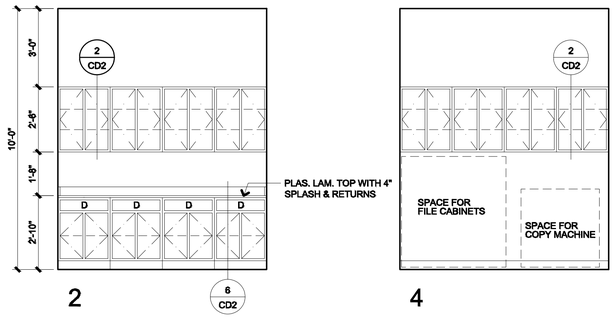

A STORAGE / COPY

SCALE: 3/8"=1'-0"

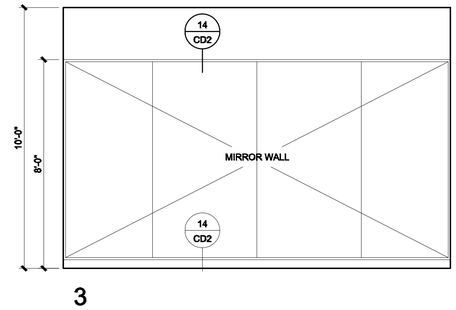

B FITNESS

SCALE: 3/8"=1'-0"

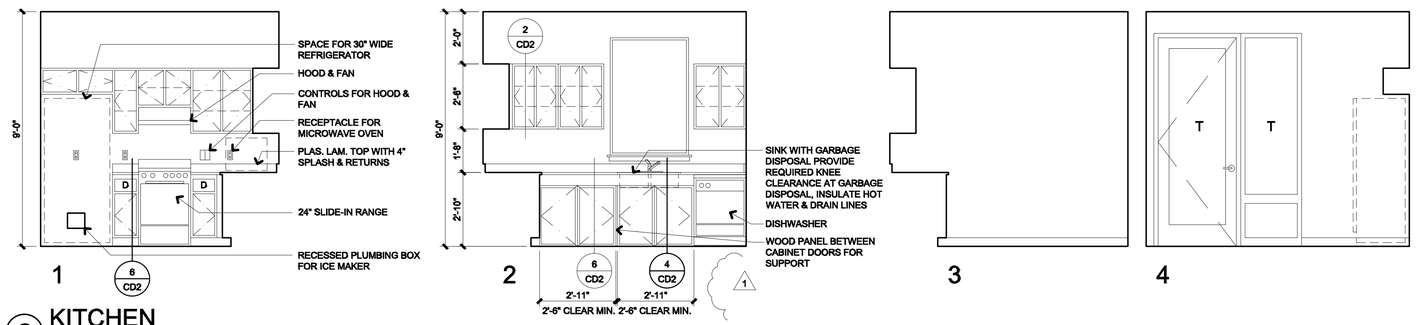

C KITCHEN

SCALE: 3/8"=1'-0"

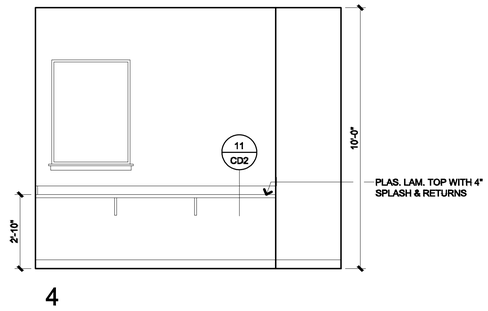

D BUSINESS CENTER

SCALE: 3/8"=1'-0"

RESTROOM KEY NOTES

1. 36" GRAB BAR AT +33" A.F.F.
2. 42" GRAB BAR AT +33" A.F.F.
3. B-2210 DIAPER CHANGING STATION. MOUNT PER MFR SPECS, BOTTOM AT 26 1/2" A.F.F.
4. WATER CLOSET
5. 60" TURNING RADIUS
6. 30" x 48" CLEAR SPACE AT SINK
6.1. 36" x 48" CLEAR SPACE AT URINAL
7. URINAL (HC) MOUNTED AT 17" TO RIM OF URINAL
8. B-4221 TOILET SEAT COVER DISPENSER
9. B-270 SANITARY NAPKIN DISPOSAL
10. SINK
11. B-2112 SURFACE MOUNTED SOAP DISPENSER
12. TILE WAINSCOT
13. B-2888 TOILET TISSUE DISPENSER
14. B-3944 PAPER TOWEL DISPENSER & TRASH RECEPTACLE
15. MIRROR - MOUNT BOTTOM AT 40" A.F.F.

SEE SHEETS X1, X2 AND X3 FOR SPECIFIC HANDICAPPED REQUIREMENTS

PROVIDE BLOCKING AS REQUIRED FOR ALL WALL MOUNTED FIXTURES, AND ALL HANDICAPPED RELATED ITEMS

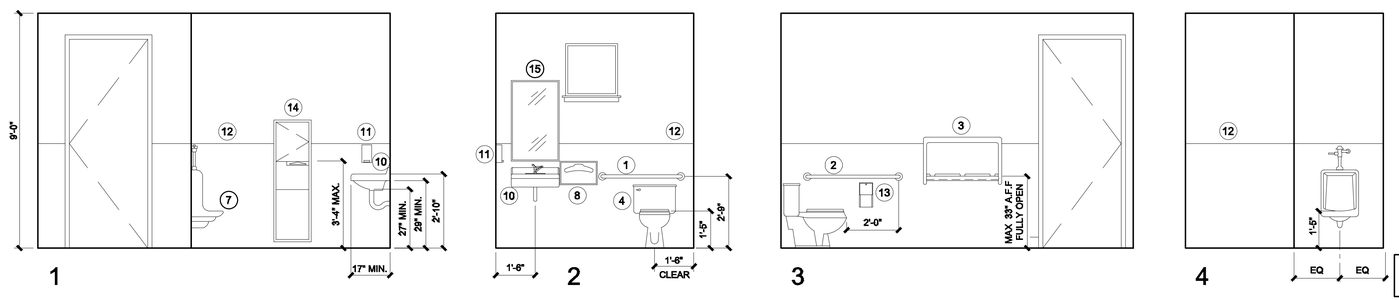

E MENS RESTROOM

SCALE: 3/8"=1'-0"

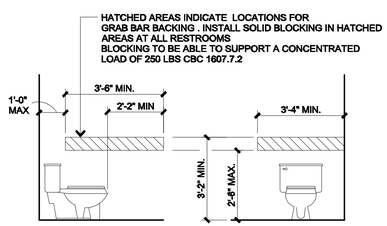

G GRAB BAR BLOCKING REQUIREMENTS

SCALE: 3/8"=1'-0"

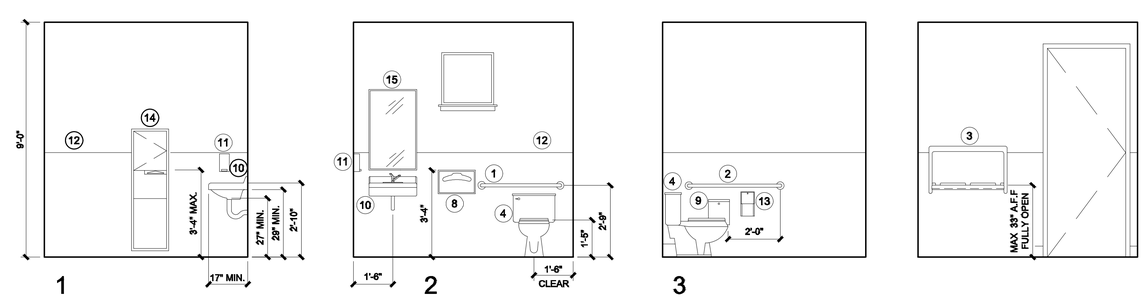

F WOMENS RESTROOM

SCALE: 3/8"=1'-0

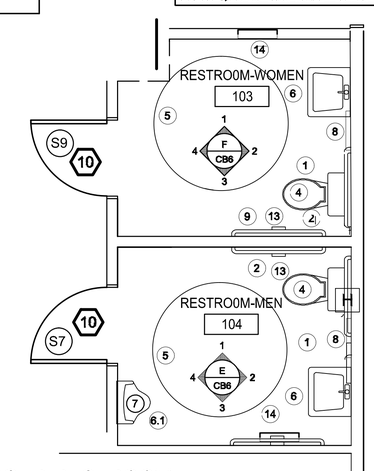

1 ENLARGED RESTROOM FLOOR PLANS

SCALE: 3/8"=1'-0"

REVISIONS	BY
9/26/2011 – PLAN CHECK	G.O.

LICENSED ARCHITECT JOSEPH OAKLEY No. 15457 REN. 9-30-11 STATE OF CALIFORNIA

OAKLEY & OAKLEY
ARCHITECT/CIVIL & STRUCTURAL ENGINEERS
7004 EDGEWATER DRIVE, SUITE 615
OAKLAND, CA 94621
510.562.6028
FAX 510.562.6043

PROJECT TITLE:
COMMUNITY CENTER
HARBOR PARK APARTMENTS
969 PORTER STREET, VALLEJO, CA 94560

DRAWING TITLE:
UNIT A FLOOR PLAN & INTERIOR ELEVATIONS

Date:	04/17/2012
Scale:	AS NOTED
Drawn:	STAFF
Checked:	RY
Job No.:	2011-09

Sheet:
A2.29
Of Sheets

Jan 18, 2014 - 11:01am Z:\Year 2011 Jobs\2011-09.3 - Community Bldg\REVISED DRAWINGS FOR NEGOTIATED CONTRACT WITH WE LYONS\ARCHITECTURE\A2.29 INTERIOR ELEVATIONS UNITS A,B,C.dwg

01 UNIT A

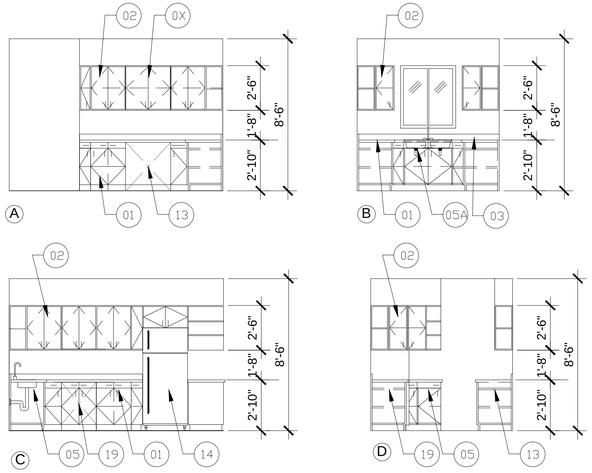

02 KITCHEN INTERIOR ELEVATION

SCALE: 1/4" = 1'-0"

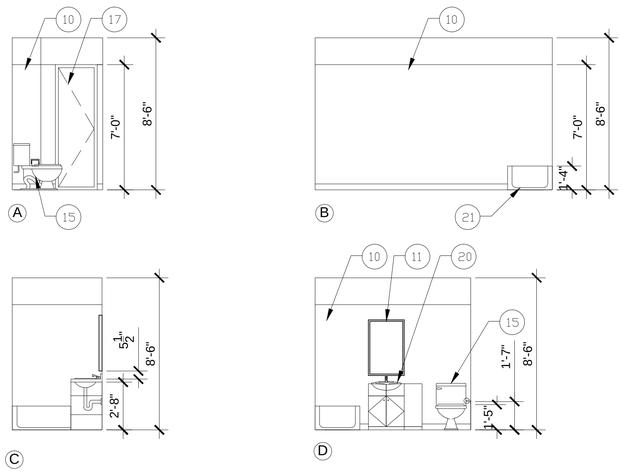

03 BATHROOM A206 INTERIOR ELEVATION

SCALE: 1/4" = 1'-0"

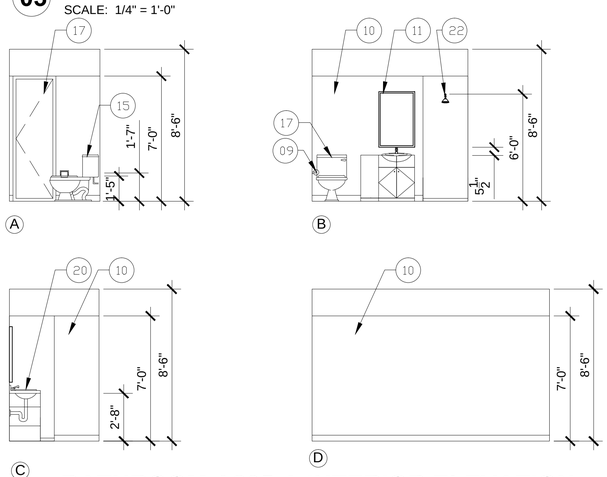

04 BATHROOM A205-A INTERIOR ELEVATION

SCALE: 1/4" = 1'-0"

01 UNIT B

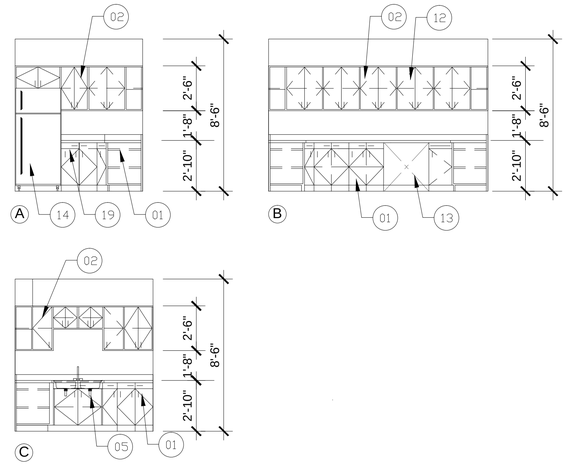

02 KITCHEN INTERIOR ELEVATION

SCALE: 1/4" = 1'-0"

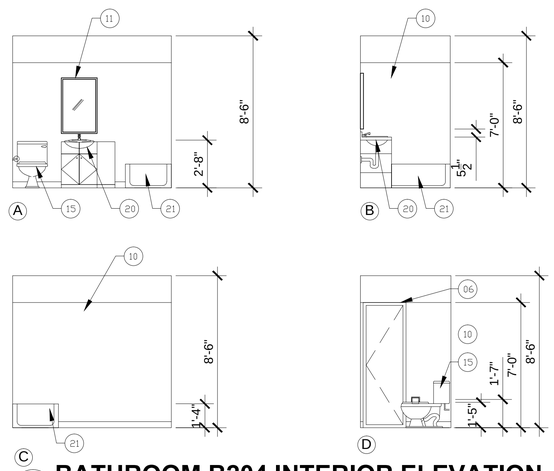

03 BATHROOM B204 INTERIOR ELEVATION

SCALE: 1/4" = 1'-0"

01 UNIT C

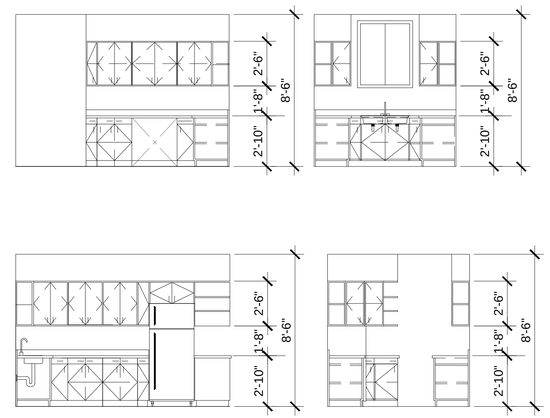

02 KITCHEN INTERIOR ELEVATION

SCALE: 1/4" = 1'-0"

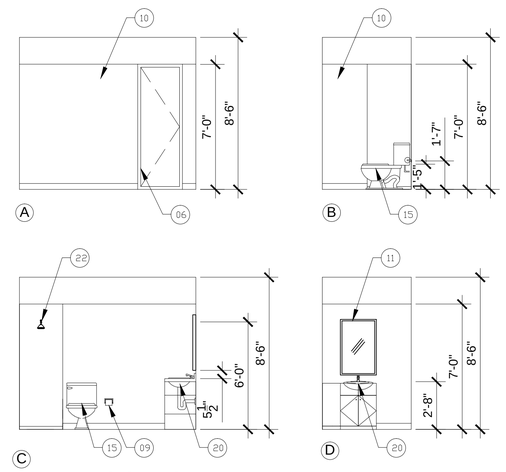

03 BATHROOM C206-A INTERIOR ELEVATION

SCALE: 1/4" = 1'-0"

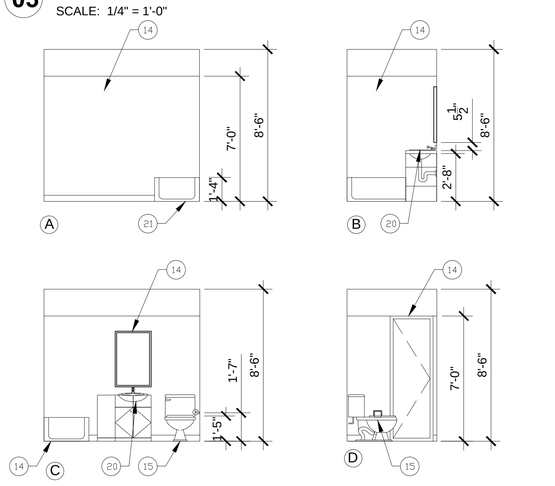

04 BATHROOM C204-A INTERIOR ELEVATION

SCALE: 1/4" = 1'-0"

KEYNOTES

01 BASE CABINETS.
02 UPPER CABINETS
03 BACK SPLASH
04 GRANITE FINISH
05 DOUBLE SINK. MIN. 30" SPACE BELOW COUNTER.
55A. BASE CABINETS AT UNIT A SHALL BE REMOVABLE FOR ADA COMPLIANCE
06 WOOD TRIM
07 PAPER TOWEL DISPENSER
08 BLOCK OUT WALL
09 TOILET TISSUE DISPENSER
10 PRE FABRICATED TUB, SHOWER AND WALL FINISH. ALL COUNTER TOPS SHALL HAVE GRANITE FINISHES.
11 MIRROR
12 RANGE HOOD
13 CONVENTIONAL OVEN/STOVE
14 ACCESSIBLE REFRIGERATOR 30" MIN. CLR.
15 FLOOR MOUNTED TOILET
16 FLOOR DRAIN
17 SOLID WOOD DOOR, SEE DOOR SCHEDULE
18 COUNTER TOP MICROWAVE
19 DISHWASHER
20 SINK. SPD
21 TUB. SPD
22 SHOWER

GENERAL NOTES

A. ALL DIMENSIONS ARE TO FACE OF STUD OR CENTERLINE OF PARTITION WALL, INTERIOR COLUMN/ WINDOW/ DOOR UNLESS OTHERWISE NOTED.

B. DETAILS ARE KEYED AND NOTED "TYPICAL" ONLY ONCE ON THE PLANS WHEN THEY FIRST OCCUR, AND ARE REPRESENTATIVE OF SIMILAR CONDITIONS THROUGHOUT, UNLESS OTHERWISE NOTED.

C. PROVIDE WATER-RESISTANT GYP. BOARD AT ALL WET WALL LOCATIONS.

D. FOR DOOR AND WINDOW KEYS REFER TO DOOR AND WINDOW SCHEDULE. SEE A9.1 REFER TO INTERIOR ELEVATION FOR CABINETS CALLOUTS. SEE SHEET A2.3, A2.4 & A2.5.

E. FOR ALL TOILETS ACCESSORIES & HEIGHTS REFER TO A2.3, A2.4 & A2.5

F. FOR FINISH FLOOR REFER TO FINISH SCHEDULE A4.1.

G. PROVIDE ACOUSTICAL SEALANT AT ALL WALLS AND CEILING CONDITION.

H. PROVIDE 5/8" THK. GYP. BD. MOISTURE RESISTANT AT WET AREAS , E RESTROOMS, LAUNDRY AREA, CLASS RESTROOM, & KITCHEN SINK AREA.

I. PROVIDE WD. BLOCKING BEHIND GYPSUM BD. PARTITION FOR ATTACHMENT FOR ALL FIXTURE, FITTINGS, ART WORK & ACCESSORIES.

J. PROVIDE WD. BLOCKING AT CEILING FOR BLINDS AT WINDOW WHERE REQUIRED.

K. PROVIDE TACKTILE SIGN AT EXIT DOORS WITH THE WORD "EXIT" PER CBC. 1011.3.

L. GROUND AND FLOOR SURFACES AT ACCESSIBLE ROUTES TO BE SLIP RESISTANCE PER CBC. 1124.B

M. SLOPE FLOOR DRAIN 1/4"=1'-0 SEE PLUMBING DWGS.

N. PROVIDE WD BLOCKING IN WALL AT GRAB BAR, CABINETS, SHELVES, AND CEILINGS AS REQUIRED FOR WINDOW SHADING.

O. PLYWOOD SHEAR WALL TO EXTEND FULL HEIGHT OF THE WALL. SSD.

P. INTERIOR FINISHES CEILINGS & WALLS SHALL BE CLASSIFIED W/ASTME 84-TYPE "C" FLAMED SPREAD 76-200, SMOKE DEVELOPED AT 0-450. TESTED W/NFPA 286

Q. INTERIOR TRIM SHALL HAVE A MIN. CLASS C FLAMED SPREAD & SMOKE DEVELOP INDEX WHEN TESTED W/ASTME-84 AND NOT TO EXCEED 10% OF AGGREGATE WALL OR CLG.

LEGEND

ONE HOUR RATED WALL

INTERIOR FULL HT. PARTITION

INTERIOR BEARING PARTITION WALL

FE FIRE EXTINGUISHER

REVISIONS	BY
9/26/2011 - PLAN CHECK	G.O.
1-20-2014 - BIDDING	LR

LICENSED ARCHITECT JOSEPH OAKLEY No. 15457 REN. 9-30-14 STATE OF CALIFORNIA

OAKLEY & OAKLEY
ARCHITECT/CIVIL & STRUCTURAL ENGINEERS
7 ADAGEWATER DRIVE
DALY CITY, CA 94015
P 510.562.6028
FAX 510.562.6043

PROJECT TITLE:
COMMUNITY CENTER
HARBOR PARK APARTMENTS
969 PORTER STREET, VALLEJO, CA 94560

DRAWING TITLE:
INTERIOR ELEVATIONS

Date: 04/17/2012
Scale: AS NOTED
Drawn: STAFF
Checked: RY
Job No.: 2011-09
Sheet: A2.3
Of Sheets

Jan 27, 2014 - 11:54pm \\Server\server drive d\Year 2011 Jobs\2011-09.3 - Community Bldg\REVISED DRAWINGS FOR NEGOTIATED CONTRACT WITH WE LYONS\ARCHITECTUA2.3 INTERIOR ELEVATIONS UNITS A,B,C revised dwg.dwg

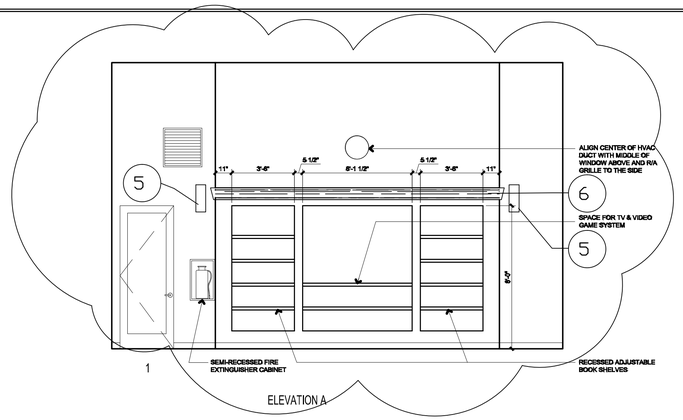

ELEVATION A

REFLECTED CEILING SYMBOL LEGEND

- SUPPLY AIR. SEE MECHANICAL PLANS
- RETURN AIR. SEE MECHANICAL PLANS
- EXHAUST FAN. SEE MECHANICAL PLANS
- 1' x 4' SURFACE MOUNTED FLUORESCENT FIXTURE. SEE ELECTRICAL PLANS
- 2' x 4' SURFACE MOUNTED FLUORESCENT FIXTURE. SEE ELECTRICAL PLANS
- ILLUMINATED EXIT SIGN SEE ELECTRICAL PLANS
- WALL MOUNTED FLUORESCENT FIXTURE SEE ELECTRICAL PLANS
- RECESSED FLUORESCENT FIXTURE SEE ELECTRICAL PLANS
- SURFACE MOUNTED FLUORESCENT NIGHT LIGHT FIXTURE SEE ELECTRICAL PLANS
- SURFACE MOUNTED FLUORESCENT FIXTURE SEE ELECTRICAL PLANS
- ILLUMINATED BUILDING ADDRESS SIGN, VERIFY SIZE W/ CITY OF VALLEJO FIRE DEPT.
- 20"x30" ATTIC ACCESS HATCH - SEE DETAIL 1/D2. PROVIDE MIN. 30" CLEAR HAEDROOM ABOVE
- 20"x30" ATTIC ACCESS HATCH (IF REQUIRED BY CLEAR ATTIC HEIGHT OVER 30" PER CBC 1209.2) - SEE DETAIL 1/D2. PROVIDE MIN. 30" CLEAR HAEDROOM ABOVE

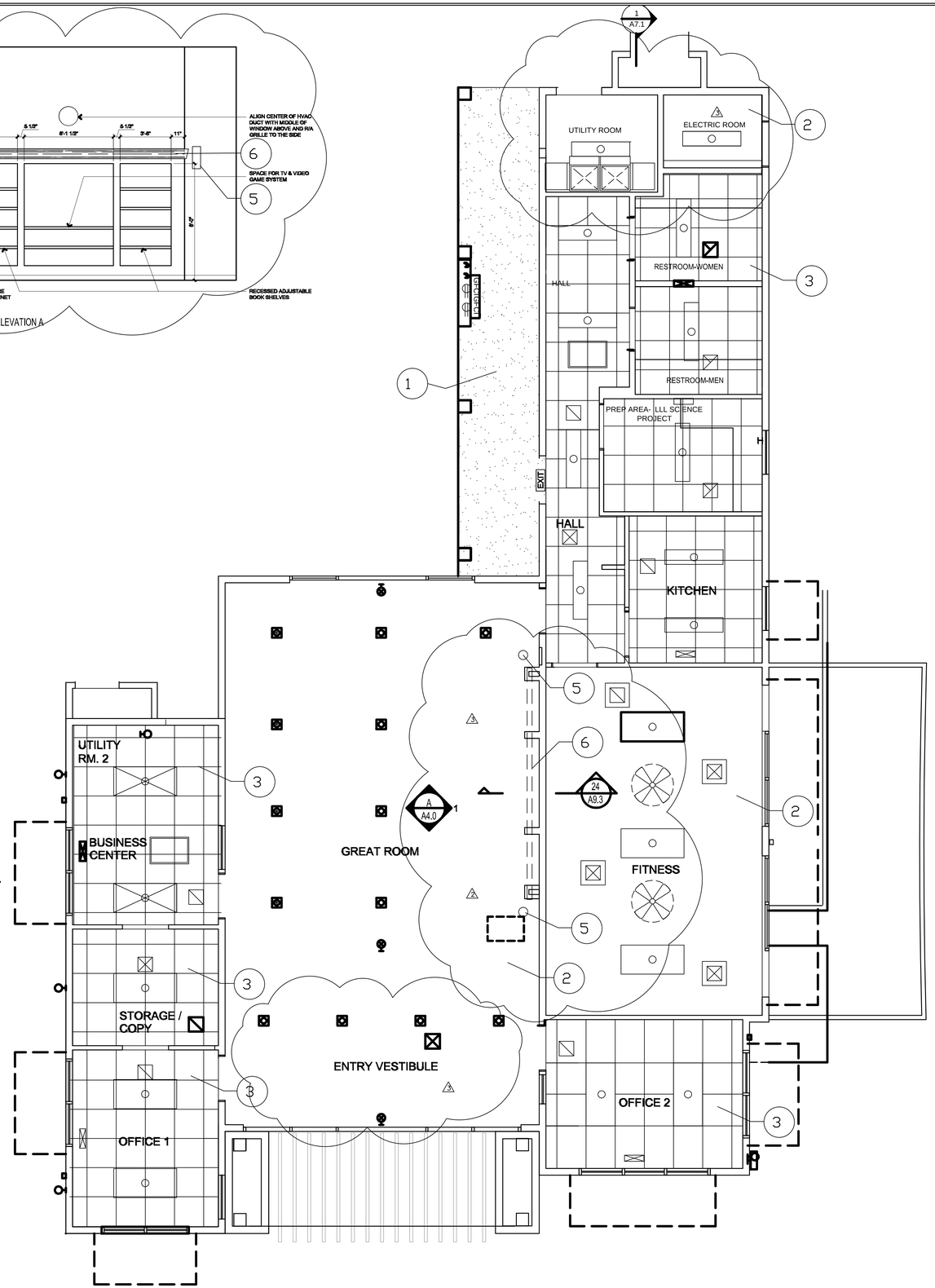

PLAN NORTH

KEYNOTES

1. STUCCO SOFFIT
2. 1 HOUR RATED GYPSUM BOARD CEILING FINISH
3. NON RATED SUSPENDED CEILING
4. PROVIDE 1 HOUR FIRE DAMPERS AT OPENINGS AT 1 HOUR RATED CEILING
5. SCONCE LIGHTING FIXTURE
6. TROUGH LIGHTING-SINGLE LINE FLOURESCENT FIXTURE WITH 2X12 WOOD FACE, 2X8 TROUGH BOTTOM

GENERAL NOTES

A. ALL DIMENSIONS ARE TO FACE OF STUD OR CENTERLINE OF PARTITION WALL, INTERIOR COLUMN/ WINDOW/ DOOR UNLESS OTHERWISE NOTED.

B. DETAILS ARE KEYED AND NOTED 'TYPICAL' ONLY ONCE ON THE PLANS WHEN THEY FIRST OCCUR, AND ARE REPRESENTATIVE OF SIMILAR CONDITIONS THROUGHOUT, UNLESS OTHERWISE NOTED.

C. PROVIDE WATER-RESISTANT GYP. BOARD AT ALL WET WALL LOCATIONS.

D. FOR DOOR AND WINDOW KEYS REFER TO DOOR AND WINDOW SCHEDULE. SEE A9.1

E. REFER TO INTERIOR ELEVATION FOR CABINETS CALLOUTS. SEE SHEET A2.3, A2.4 & A2.5.

F. FOR ALL TOILETS ACCESSORIES & HEIGHTS REFER TO A2.3, A2.4 & A2.5

G. FOR FINISH FLOOR REFER TO FINISH SCHEDULE A4.1.

H. PROVIDE ACOUSTICAL SEALANT AT ALL WALLS AND CEILING CONDITION.

I. PROVIDE 5/8" THK. GYP. BD. MOISTURE RESISTANT AT WET AREAS , BATHROOMS & KITCHEN SINK AREA.

J. PROVIDE WD. BLOCKING BEHIND GYPSUM BD. PARTITION FOR ATTACHMENT FOR ALL FIXTURE, FITTINGS, ART WORK & ACCESSORIES.

K. PROVIDE WD. BLOCKING AT CEILING FOR BLINDS AT WINDOW WHERE REQUIRED.

L. GROUND AND FLOOR SURFACES AT ACCESSIBLE ROUTES TO BE SLIP RESISTANCE PER CBC. 1124.B

M. SLOPE FLOOR DRAIN ¼"=1'-0 SEE PLUMBING DWGS.

N. PROVIDE WD BLOCKING IN WALL AT GRAB BAR, CABINETS, SHELVES, AND CEILINGS AS REQUIRED FOR WINDOW SHADING.

O. PLYWOOD SHEAR WALL TO EXTEND FULL HEIGHT OF THE WALL. SSD.

P. INTERIOR FINISHES CEILINGS & WALLS SHALL BE CLASSIFIED W/ASTME 84-TYPE "C" FLAMED SPREAD 76-200, SMOKE DEVELOPED AT 0-450. TESTED W/NFPA 286

Q. INTERIOR TRIM SHALL HAVE A MIN. CLASS C FLAMED SPREAD & SMOKE DEVELOP INDEX WHEN TESTED W/ASTME-84 AND NOT TO EXCEED 10% OF AGGREGATE WALL OR CLG.

R. REFER TO SHEET AX.0X FOR WALL TYPE LEGEND

LEGEND

- ONE HOUR RATED WALL.
- INTERIOR FULL HT. PARTITION.
- INTERIOR BEARING PARTITION WALL.
- FIRE EXTINGUISHER

REVISIONS	BY
9/26/2011 - PLAN CHECK	G.O.
01/08/2014 - BIDDING	TG
01/09/2014 - BIDDING	TG

LICENSED ARCHITECT JOSEPH OAKLEY No. 15457 REN. 9-30-11 STATE OF CALIFORNIA

OAKLEY & OAKLEY
ARCHITECTS CIVIL & STRUCTURAL ENGINEERS
700 EDGEWATER DRIVE STE. 615
VALLEJO, CA 94592
510.562.6028
FAX 510.562.6043

PROJECT TITLE:
COMMUNITY CENTER
HARBOR PARK APARTMENTS
969 PORTER STREET, VALLEJO, CA 94560

DRAWING TITLE:
REFLECTED CEILING PLAN

Date:	04/17/2012
Scale:	AS NOTED
Drawn:	STAFF
Checked:	RY
Job No.:	2011-09
Sheet:	A4.0
Of	Sheets

Jan 20, 2014 - 1:41pm Z:\Year 2011 Jobs\2011-09.3 - Community Bldg\REVISED DRAWINGS FOR NEGOTIATED CONTRACT WITH WE LYONS\ARCHITECTURE\A4.0 REFLECTED CEILING PLAN COMMUNITY ROOM_080812.dwg

01 FINISH SCHEDULE-UNITS A, B ,C

SCALE: NO SCALE

NUMBER	NAME	FLOOR	CEILING	BASE	WALL NORTH	WALL SOUTH	WALL EAST	WALL WEST	NOTES
A201	LIVING ROOM	F1	C1	B4	W1, P1	W1, P1	W1, P1	W1, P1	
A202	DINING ROOM	F1	C1	B4	W1, P1	W1, P1	W1, P1	W1, P1	
A203	KITCHEN	F2	C1	B3	W1, P2	W1, P2	W1, P2	W1, P2	
A204	BEDROOM	F1	C1	B4	W1, P1	W1, P1	W1, P1	W1, P1	
A204A	CLOSET	F1	C1	B4	W1, P1	W1, P1	W1, P1	W1, P1	
A204AA	LAUNDRY	F2	C1	B3	W1, P2	W1, P2	W1, P2	W1, P2	
A205	BEDROOM	F1	C1	B4	W1, P1	W1, P1	W1, P1	W1, P1	
A205A	BATHROOM	F4	C1	B3	W1, P2	W1, P2	W1, P2	W1, P2	W2 AT TUBS/SHOWERS
A205B	CLOSET	F1	C1	B4	W1, P1	W1, P1	W1, P1	W1, P1	
A206	BEDROOM	F1	C1	B4	W1, P1	W1, P1	W1, P1	W1, P1	
A206A	BATHROOM	F4	C1	B3	W1, P2	W1, P2	W1, P2	W1, P2	W2 AT TUBS/SHOWERS
A206B	CLOSET	F1	C1	B4	W1, P1	W1, P1	W1, P1	W1, P1	
A207	DECK	F5	C1	---	---	---	---	---	
A207A	BATHROOM	F4	C1	B3	W1, P2	W1, P2	W1, P2	W1, P2	W2 AT TUBS/SHOWERS
A207B	CLOSET	F1	C1	B4	W1, P1	W1, P1	W1, P1	W1, P1	
A208	DECK	F5	---	---	---	---	---	---	DEXOTEX FINISH UNDER TILE
B201	LIVING ROOM	F1	C1	B4	W1, P1	W1, P1	W1, P1	W1, P1	
B202	DINING ROOM	F1	C1	B4	W1, P1	W1, P1	W1, P1	W1, P1	
B203	KITCHEN	F4	C1	B3	W1, P2	W1, P2	W1, P2	W1, P2	
B204	BATHROOM	F4	C1	B3	W1, P2	W1, P2	W1, P2	W1, P2	W2 AT TUBS/SHOWERS
B205	BEDROOM	F1	C1	B4	W1, P1	W1, P1	W1, P1	W1, P1	
B205A	CLOSET	F1	C1	B4	W1, P1	W1, P1	W1, P1	W1, P1	
B206	BATHROOM	F4	C1	B3	W1, P2	W1, P2	W1, P2	W1, P2	W2 AT TUBS/SHOWERS
B207B	CLOSET	F1	C1	B4	W1, P1	W1, P1	W1, P1	W1, P1	
B207C	CLOSET	F1	C1	B4	W1, P1	W1, P1	W1, P1	W1, P1	
B205A	CLOSET	F1	C1	B4	W1, P1	W1, P1	W1, P1	W1, P1	
B209	CLOSET	F1	C1	B4	W1, P1	W1, P1	W1, P1	W1, P1	
B209A	CLOSET	F1	C1	B4	W1, P1	W1, P1	W1, P1	W1, P1	
B206	DECK	F5	---	---	---	---	---	---	DEXOTEX FINISH UNDER TILE
C201	LIVING ROOM	F1	C1	B4	W1, P1	W1, P1	W1, P1	W1, P1	
C202	DINING ROOM	F1	C1	B4	W1, P1	W1, P1	W1, P1	W1, P1	
C203	KITCHEN	F2	C1	B3	W1, P2	W1, P2	W1, P2	W1, P2	
C204	CLOSET	F1	C1	B4	W1, P1	W1, P1	W1, P1	W1, P1	
C204A	CLOSET	F1	C1	B4	W1, P1	W1, P1	W1, P1	W1, P1	
C204B	CLOSET	F1	C1	B4	W1, P1	W1, P1	W1, P1	W1, P1	
C204C	BATHROOM	F2	C1	B4	W1, P2	W1, P2	W1, P2	W1, P2	W2 AT TUBS/SHOWERS
C205	BEDROOM	F1	C1	B4	W1, P1	W1, P1	W1, P1	W1, P1	
C206	BEDROOM	F1	C1	B4	W1, P1	W1, P1	W1, P1	W1, P1	
C206A	CLOSET	F1	C1	B4	W1, P1	W1, P1	W1, P1	W1, P1	
C206B	BEDROOM	F1	C1	B4	W1, P1	W1, P1	W1, P1	W1, P1	
C208	CLOSET	F1	C1	B4	W1, P1	W1, P1	W1, P1	W1, P1	
C208A	BATHROOM	F4	C1	B3	W1, P2	W1, P2	W1, P2	W1, P2	W2 AT TUBS/SHOWERS
C208B	CLOSET	F1	C1	B4	W1, P1	W1, P1	W1, P1	W1, P1	
C209	DECK	F5	---	---	---	---	---	---	DEXOTEX FINISH UNDER TILE

FINISH LEGENDS

FLOORS

- **F1 CARPET**
- **F2** SHEET VINYL
- **F3 CONCRETE SMOOTH FINISH SEALED**
- **F4**
- **F5 RUBBER TILE** BY OWNER

BASE

- **B1 4" MDF BASE**
- **B3 4" RUBBER BASE**
- **B4 2" WOOD BASE**

WALLS

- **W1 GYPSUM BOARD,** SPRAY TEXTURED
- **W2** PREFABICATED TUB, SHOWER AND WALL FINISH

CEILINGS

- **C1 GYPSUM BOARD,** SPRAY TEXTURED

PAINT

- **P1 PAINT FLAT LATEX**
- **P2 PAINT SEMI GLOSS**

GENERAL FINISH NOTES

1. **PAINT HVAC REGISTERS TO MATCH THE COLOR OF THE WALL ON WHICH THEY OCCUR**
2. NOT USED
3. **SQUARE ALL OUTSIDE CORNERS AT WALL, CEILINGS HEADERS, ARCHES SOFFITS, NICHES, DOORS, WINDOWS, ETC.**

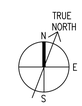

KEYNOTES

GENERAL NOTES

CONTRACTOR SHALL BE RESPONSIBLE FOR VERIFICATION OF DIMENSION AND CLEARANCE REQUIREMENTS OF ALL EQUIPMENT. WHERE DIMENSIONS OR CLEARANCES CAUSE CONFLICT WITH OTHER INFORMATION CONTAINED WITHIN THE CONTRACT DOCUMENTS, CONTRACTOR SHALL VERIFY WITH ARCHITECT PRIOR TO PROCEEDING WITH WORK.

MAXIMUM FLAME SPREAD FOR INTERIOR FINISHES SHALL BE: CLASS X FOR EXIT WAYS; AND CLASS XI FOR ROOMS OR AREAS.

C. DO NOT COVER ANY SPRINKLER PIPING OR HARDWARE DURING CONSTRUCTION UNTIL SUCH PIPING AND HARDWARE HAS BEEN INSPECTED AND APPROVED.

SEE SHEET A9.1 FOR WINDOW AND DOOR SCHEDULES,

ABBREVIATIONS

BASE:
- RBT RUBBER TOPSET 4" HIGH.
- ECB EPOXY COATING, COVED.
- RBC RUBBER BASE, COVED.

FLOOR:
- VCT VINYL COMPOSITE TILE.
- LIN LINOLEUM, SHEET.
- TZF TERRAZZO W / INTERGAL BASE.
- ECF EPOXY COATING W / INTERGAL BASE.
- SEC SEALED EXPOSED CONCRETE.

WALLS:
- PT PAINT.
- FRP FIBER REINFORCED PANEL.

CEILING:
- PT GYPSUM BOARD PAINT FINISH.
- ACT SUSPEND ACOUSTICAL TILE CEILING.

LEGEND

- LINOLEUM
- EXPOSED CONCRETE
- EPOXY COATING W / INTEGRAL BASE
- VINYL COMPOSITE TILE

REVISIONS	BY
9/26/2011 – PLAN CHECK	G.O.
1/18/2011 – BIDDING	LR

LICENSED ARCHITECT
JOSEPH OAKLEY
No. 15457
REN. 9-30-11
STATE OF CALIFORNIA

OAKLEY & OAKLEY
ARCHITECT/CIVIL & STRUCTURAL ENGINEERS
7700 EDGEWATER DRIVE, STE 615
OAKLAND, CA 94621
510.562.6028
FAX 510.562.6043

PROJECT TITLE:
COMMUNITY CENTER
HARBOR PARK APARTMENTS
969 PORTER STREET, VALLEJO, CA 94560

DRAWING TITLE:
FINISH SCHEDULE

Date:	04/17/2012
Scale:	AS NOTED
Drawn:	STAFF
Checked:	RY
Job No.:	2011-09

Sheet:
A4.11
Of Sheets

Jan 27, 2014 - 6:07pm \\SERVER\Server Drive D\Year 2011 Jobs\2011-09.3 - Community Bldg\REVISED DRAWINGS FOR NEGOTIATED CONTRACT WITH WE LYONS\ARCHITECT\A4.11 Finish Plan And Finish Schedule.dwg

Commercial Hardware 1st floor
Hardware for exterior storefronts supplied by Glazing Contractor
Lever exterior, panic hardware interior, Deadbolt
Community Center Interior
Interior Lock Specification
All Doors AL Series Neptune (NEP) Finish 626
Door Closers
LCN 4030 I Parralle arm Non rated Silver 180 degree open
Hinges
Full Mortise 4.5x4.5 Standard Weight Brushed Chrome 26D McKinney TA2314
Door Stops
Ives 407 1/2 Brushed Chrome
Flush Bolts
Concealed
Project: Harbor Park
Community Center Door Schedule

Designation			Door					Frame				Hardware						
Door #	Rm	Location	Size	Handing	Material	Rating	Glazing	Wall Size	Material	Type	Sidlite	Lockset	Closer	Door Stop	Theashold	Hinges	Weather Striping	Notes
1	109	Interior	3-0x8-0x1-3/4	Right	SC Wood PG	NR	Full Lite wood frame	7-1/4"	AL White	Raco	none	AL70PD		Wall		2 Pair		Door is aluminum Raco door with Full Glass Light Clear
2	111	Interior	3-0x8-0x1-3/4	Left	SC Wood PG	NR	Full Lite wood frame	7-1/4"	AL White	Raco	3-0x8-0	AL70PD		Wall		2 Pair		Clear Glazing, Full Door Light, Full Sidelight
3	107	Interior	3-0x8-0x1-3/4	Left	SC Wood PG	NR	Full Lite wood frame	7-1/4"	AL White	Raco	2-0x8-0	AL70PD		Wall		2 Pair		Door is aluminum Raco door with Full Glass Light Clear
4	110	Interior	3-0x7-0x1-3/4	Right	SC Wood PG	NR	Full Lite wood frame	4-7/8	AL White	Raco		AL70PD		Wall		1-1/2 Pair		Raco AL Frame
5	110	Interior	3-0x7-0x1-3/4	Right	SC Wood PG	NR	Full Lite wood frame	4-7/8	AL White	Raco		AL70PD		Wall		1-1/2 Pair		Raco AL Frame
6	112	Interior	3-0x8-0x1-3/4	Right	AL	NR	Full Lite wood frame	7-1/4"	AL White	Raco		AL70PD		Wall		2 Pair		Clear Glazing, Full Door Light, Full Sidelight
7	109	Interior	3-0x8-0x1-3/4	Right	AL	NR	Full Lite wood frame	7-1/4"	AL White	Raco		AL70PD		Wall		2 Pair		Door is aluminum Raco door with Full Glass Light Clear
8	105	Interior	3-0x8-0x1-3/4	Right	AL	NR	Full Lite wood frame	4-7/8"	AL White	Raco	2-0x8-0	AL70PD		Wall		2 Pair		Door is aluminum Raco door with Full Glass Light Clear
9	Prep Area	Interior	3-0x8-0x1-3/4	Left	SC Wood PG	NR	Full Lite wood frame	4-7/8"	AL White	Raco		AL70PD		Wall		1-1/2 Pair		Raco AL Frame
10	104	Interior	3-0x7-0x1-3/4	Left	SC Wood PG	NR		4-7/8"	AL White	Raco		AL405	x	Wall		1-1/2 Pair		Raco AL Frame
11	103	Interior	3-0x7-0x1-3/4	Right	SC Wood PG	NR		4-7/8"	AL White	Raco		AL70PD	x	Wall		1-1/2 Pair		Raco AL Frame
12	100	Exterior	3-0x7-0x1-3/4	Left	HM	20 min		7-1/4"	HM	Welded		AL80PD		Ives FS444	Pemco 1665 A	1-1/2 Pair NRP		
13	102	Exterior	3-0x7-0x1-3/4	Left	HM	20 min		7-1/4"	HM	Welded		AL80PD		Ives FS444	Pemco 1665 A	1-1/2 Pair NRP		
14	Util 2	Exterior	Pr 2-6x7-0x1-3/4		HM	20 min		7-1/4"	HM	Welded		AL80PD		2 ea Ives FS444	Pemco 1665 A	1-1/2 Pair NRP		Full Louver Doors w/ Astrical and Conceiled Flush Bolts
15	112	Exterior	Pr 3-0x8-0x1-3/4		AL Store Front White	NR		380B0	AL White	Store Front System	See Window Sch.	Exterior Pull Interior Panic	Surface mount ADA	2 ea Ives FS444	By Glazing Contractor	By Glazing Contractor		3 point lock with Schlage 5 pin Rim Cylinder. Keying and Keyway TBD
16	112	Exterior	Pr 3-0x8-0x1-3/4		AL Store Front White	NR		4-3/4	AL White	Store Front System	See Window Sch.	Exterior Pull Interior Panic	Surface mount ADA	2 ea Ives FS444	By Glazing Contractor	By Glazing Contractor		3 point lock with Schlage 5 pin Rim Cylinder. Keying and Keyway TBD
17	Hall	Exterior	3-0x8-0x1-3/4	Right	AL Store Front White	NR		4-3/4	AL White	Store Front System		Lever Exterior Lever Interior	Surface mount ADA 180 Degree	Ives FS444	By Glazing Contractor	By Glazing Contractor		Lock store room function
18	106	Exterior	3-0x8-0x1-3/4	Left	AL Store Front White	NR		4-3/4	AL White	Store Front System		Lever Exterior Lever Interior	Surface mount ADA 180 Degree	Ives FS444	By Glazing Contractor	By Glazing Contractor		Lock store room function
19	106	Exterior	3-0x8-0x1-3/4	Right	AL Store Front White	NR		4-3/4	AL White	Store Front System		Lever Exterior Lever Interior	Surface mount ADA 180 Degree	Ives FS444	By Glazing Contractor	By Glazing Contractor		Lock store room function

Residentail Doors

Unit A ADA Unit

Designation			Door					Frame				Hardware						
Door #	Rm	Location	Size	Handing	Type	Rating	Material	Jamb	Material	Trim ext	Casing Int	Lockset	Closer	Door Stop	Theashold	Hinges	Weather Striping	Notes
A1	A201	ENTRY	3-0X6-8X1-3/4	RH	6 panel Smoth Paint Grade	N/A	Fiberglass	6-9/16	Wood	Stucco Mold	2-1/4"	Schlage S-200 NEP 626 Interconnected	N/A	Base board Spring	Intagal to frame AL	Brushed Chrome	Intragial to Door Frame	
A2	A206	Deck	6-0x6-8 x1-3/4	RH	3-0 Full Lite with 3-0 Full side Side lite		Fiberglass	6-9/16	Wood	Stucco Mold	2-1/4"	Schlage S-200 NEP 620 Interconnected	N/A	Base board Spring	Intagal to frame AL	Brushed Chrome	Intragial to Door Frame	Glazing Enery Star Low E Clear Class No Grids. Fixed Light on Left From Exterior
A3	A208	Bath	2-10x6-8x1-3/8	RH	6 Panel HC	NA	Composite	4-9/16	Wood	2-1/4"	2-1/4"	Schlage S400 NEP 626	N/A	Base board Spring	N/A	Brushed Chrome	N/A	
A4	A204-AA	Closet	2-10x6-8x1-3/8	RH	6 Panel HC	NA	Composite	4-9/16	Wood	2-1/4"	2-1/4"	Schlage S100 NEP 626	N/A	Base board Spring	N/A	Brushed Chrome	N/A	
A5	A205	Bedroom	2-10x6-8x1-3/8	RH	6 Panel HC	NA	Composite	7-1/16	Wood	2-1/4"	2-1/4"	Schlage S400 NEP 626	N/A	Base board Spring	N/A	Brushed Chrome	N/A	
A6	A205	Bedroom	2-10x6-8x1-3/8	RH	6 Panel HC	NA	Composite	4-9/16	Wood	2-1/4"	2-1/4"	Schlage S400 NEP 626	N/A	Base board Spring	N/A	Brushed Chrome	N/A	
A-7	A205B	Closet	2-10x6-8x1-3/8	RH	6 Panel HC	NA	Composite	4-9/16	Wood	2-1/4"	2-1/4"	Schlage S100 NEP 626	N/A	Base board Spring	N/A	Brushed Chrome	N/A	
A-8	A205A	Bath	2-10x6-8x1-3/8	Pocket	6 Panel HC	NA	Composite	4-9/16	Wood	2-1/4"	2-1/4"	Privacey Pocket Door Latch-626	N/A	N/A	N/A	N/A	N/A	
A-9	A205B	Closet	2-10x6-8x1-3/8	LH	6 Panel HC	NA	Composite	7-1/8	Wood	2-1/4"	2-1/4"	Schlage S100 NEP 626	N/A	Base board Spring	N/A	Brushed Chrome	N/A	
A10	A207	Bedroom	2-10x6-8x1-3/8	LH	6 Panel HC	NA	Composite	4-9/16	Wood	2-1/4"	2-1/4"	Schlage S400 NEP 626	N/A	Base board Spring	N/A	Brushed Chrome	N/A	
A-11	A207A	Closet	2-6x6-8x1-3/8	RH	6 Panel HC	NA	Composite	4-9/16	Wood	2-1/4"	2-1/4"	Schlage S100 NEP 626	N/A	Base board Spring	N/A	Brushed Chrome	N/A	
A-12	A207B	Closet	2-6x6-8x1-3/8	RH	6 Panel HC	NA	Composite	4-9/16	Wood	2-1/4"	2-1/4"	Schlage S100 NEP 626	N/A	Base board Spring	N/A	Brushed Chrome	N/A	
A-13	A207-A	Bath	2-8x6-8x1-3/8	RH	6 Panel HC	NA	Composite	4-9/16	Wood	2-1/4"	2-1/4"	Schlage S400 NEP 626	N/A	Base board Spring	N/A	Brushed Chrome	N/A	
A14	A208	Deck	2-8x6-8x1-34	RH	Full Lite	NA	Fiberglass	6-9/16	Wood	Stucco Mold	2-1/4"	Schlage S-200 NEP 625 Interconnected	N/A	Base board Spring	Intagal to frame AL	Brushed Chrome	Intragial to Door Frame	Glazing Enery Star Low E Clear Class No Grids

Unit B Standard Unit

Designation			Door					Frame				Hardware						
Door #	Rm	Location	Size	Handing	Type	Rating	Material	Jamb	Material	Trim ext	Casing Int	Lockset	Closer	Door Stop	Theashold	Hinges	Weather Striping	Notes
B1	B202	ENTRY	3-0X6-8X1-3/4	LH	6 panel Smoth Paint Grade	N/A	Fiberglass	6-9/16	Wood	Stucco Mold	2-1/4"	Schlage S-200 NEP 625 Interconnected	N/A	Base board Spring	Intagal to frame AL	Brushed Chrome	Intragial to Door Frame	
B2	B206	Deck	6-0x6-8 x1-3/4	LH	3-0 Full Lite with 3-0 Full side Side lite	N/A	Fiberglass	6-9/16	Wood	Stucco Mold	2-1/4"	Schlage S-200 NEP 625 Interconnected	N/A	Base board Spring	Intagal to frame AL	Brushed Chrome	Intragial to Door Frame	Glazing Enery Star Low E Clear Class No Grids Fixed Lite on Right From Exterior
B3	B205	Bedroom	2-6x6-8x1-3/8	LH	6 Panel HC	NA	Composite	7-1/8	Wood	2-1/4"	2-1/4"	Schlage S400 NEP 626	N/A	Base board Spring	N/A	Brushed Chrome	N/A	
B4	B204	Bath	2-4x6-8x1-3/8	Pocket	6 Panel HC	NA	Composite	4-9/16	Wood	2-1/4"	2-1/4"	Schlage S400 NEP 626	N/A	N/A	N/A	N/A	N/A	
B5	B205A	Closet	Pair 4-0x6-8x1-3/8	Bi Pass	6 Panel HC	NA	Composite		Wood			Cup Pulls	N/A	NA	N/A	Brushed Chrome	N/A	Provide Bi Pass Hardware
B6	B207	Bedroom	2-6x6-8x1-3/8	RH	6 Panel HC	NA	Composite	6-9/16	Wood	2-1/4"	2-1/4"	Schlage S400 NEP 626	N/A	Base board Spring	N/A	Brushed Chrome	N/A	
B7	B209	Bath	2-4x6-8x1-3/8	RH	6 Panel HC	NA	Composite	4-9/16	Wood	2-1/4"	2-1/4"	Schlage S400 NEP 626	N/A	N/A	N/A	N/A	N/A	
B8	B209A	Closet	2-4x6-8x1-3/8	LH	6 Panel HC	NA	Composite	4-9/16	Wood	2-1/4"	2-1/4"	Schlage S100 NEP 626	N/A	Base board Spring	N/A	Brushed Chrome	N/A	
B9	B207C	Closet	Pair 2-0x6-8x1-3/8	Bi Pass	6 Panel HC	NA	Composite		Wood			Cup Pulls	N/A	NA	N/A	Brushed Chrome	N/A	Provide Bi Pass Hardware
B10	A208	Deck	2-8x6-8x1-34	RH Reverse	Full Lite	NA	Fiberglass	6-9/16	Wood	Stucco Mold	2-1/4"	Schlage S-200 NEP 625 Interconnected	N/A	Base board Spring	Intagal to frame AL	Brushed Chrome	Intragial to Door Frame	Glazing Enery Star Low E Clear Class No Grids

Unit C

Designation			Door					Frame				Hardware						
Door #	Rm	Location	Size	Handing	Type	Rating	Material	Jamb	Material	Trim ext	Casing Int	Lockset	Closer	Door Stop	Theashold	Hinges	Weather Striping	Notes
C1	C201	ENTRY	3-0X6-8X1-3/4	LH	6 panel Smoth Paint Grade	N/A	Fiberglass	6-9/16	Wood	Stucco Mold	2-1/4"	Schlage S-200 NEP 625 Interconnected	N/A	Base board Spring	Intagal to frame AL	Brushed Chrome	Intragial to Door Frame	
C2	C206	Bedroom	2-6x6-8x1-3/8	RH	6 Panel HC	NA	Composite	7-9/16	Wood	2-1/4"	2-1/4"	Schlage S400 NEP 626	N/A	Base board Spring	N/A	Brushed Chrome	N/A	
C3	C206A	Bath	2-4x6-8x1-3/8	Pocket	6 Panel HC	NA	Composite	4-9/16	Wood	2-1/4"	2-1/4"	Privacey Pocket Door Latch-626	N/A	N/A	N/A	N/A	N/A	
C4	C206B	Closet	Pair 2-0x6-8x1-3/8	Bi Pass	6 Panel HC	NA	Composite		Wood			Cup Pulls	N/A	NA	N/A	Brushed Chrome	N/A	Provide Bi Pass Hardware
C5	C201 under stair	Closet	2-6x6-8x1-3/8	RH	6 Panel HC	NA	Composite	4-9/16	Wood	2-1/4"	2-1/4"	Schlage S400 NEP 626	N/A	Base board Spring	N/A	Brushed Chrome	N/A	
C6	C206B	Closet	Pair 2-0x6-8x1-3/8	Bi Pass	6 Panel HC	NA	Composite		Wood			Cup Pulls	N/A	NA	N/A	Brushed Chrome	N/A	Provide Bi Pass Hardware
C7	C204	Bedroom	2-6x6-8x1-3/8	RH	6 Panel HC	NA	Composite	4-9/16	Wood	2-1/4"	2-1/4"	Schlage S400 NEP 626	N/A	Base board Spring	N/A	Brushed Chrome	N/A	
C-8	C204C	Bath	2-4x6-8x1-3/8	LH	6 Panel HC	NA	Composite	4-9/16	Wood	2-1/4"	2-1/4"	Privacey Pocket Door Latch-626	N/A	N/A	N/A	N/A	N/A	
C9	C204B	Closet	2-6x6-8x1-3/8	LH	6 Panel HC	NA	Composite	4-9/16	Wood	2-1/4"	2-1/4"	Schlage S400 NEP 626	N/A	Base board Spring	N/A	Brushed Chrome	N/A	
C10	C208	Bedroom	2-6x6-8x1-3/8	LH	6 Panel HC	NA	Composite	4-9/16	Wood	2-1/4"	2-1/4"	Schlage S400 NEP 626	N/A	Base board Spring	N/A	Brushed Chrome	N/A	
C-11	C208A	Bath	2-4x6-8x1-3/8	RH	6 Panel HC	NA	Composite	4-9/16	Wood	2-1/4"	2-1/4"	Privacey Pocket Door Latch-626	N/A	N/A	N/A	N/A	N/A	
C-12	C208B	Closet	Pair 4-0x6-8x1-3/8	Bi Pass	6 Panel HC	NA	Composite		Wood			Cup Pulls	N/A	NA	N/A	Brushed Chrome	N/A	Provide Bi Pass Hardware
C13	A206	Deck	6-0x6-8 x1-3/4	LH	3-0 Full Lite with 3-0 Full side Side lite		Fiberglass	6-9/16	Wood	Stucco Mold	2-1/4"	Schlage S-200 NEP 625 Interconnected	N/A	Base board Spring	Intagal to frame AL	Brushed Chrome	Intragial to Door Frame	Glazing Enery Star Low E Clear Class No Grids. Fixed Light on Right From Exterior

REVISIONS	BY
9/26/2011 – PLAN CHECK	G.O.
01/20/2014– BIDDING	LR
01/27/2014– BIDDING	JO

LICENSED ARCHITECT
JOSEPH OAKLEY JR.
No. 15457
REN. 9-30-14
STATE OF CALIFORNIA

OAKLEY & OAKLEY
ARCHITECTS & STRUCTURAL ENGINEERS
7 ALLEN STREET
OAKLAND, CA 94621
PH. 510.562.6215
FAX. 510.562.6043

PROJECT TITLE:
COMMUNITY CENTER
HARBOR PARK APARTMENTS
969 PORTER STREET, VALLEJO, CA 94560

DRAWING TITLE:
DOOR, WINDOW & FINISH SCHEDULE

Date:	08/30/2011
Scale:	AS NOTED
Drawn:	STAFF
Checked:	RY
Job No.:	2011–09
Sheet:	A4.10
Of	Sheets

Jan 27, 2014 - 5:49pm \\SERVER\Server Drive D\Year 2011 Jobs\2011-09.3 - Community Bldg\REVISED DRAWINGS FOR NEGOTIATED CONTRACT WITH WE LYONS\ARCHITECTUA410 - DOOR Schedule REVISED FOR WELYONS BID DOORS.dwg

WINDOW SCHEDULE

WINDOW MARK	WINDOW TYPE	SIZE WIDTH	SIZE HEIGHT	FRAME TYPE	MATERIAL	GLAZING SINGLE	GLAZING DOUBLE	GLAZING TEMP	GLAZING LOW E	DETAILS HEAD	DETAILS JAMB	DETAILS SILL	DETAILS MULL	RATING	REMARKS
A	1	19'-0"	16'-6"		ALUM		X	X	X	17/CD1	17/CD1	21,23/CD1			
B	2	+/-5'-0	+/-5'-0		WOOD	X				7/CD1	7/CD1	2 /CD1	1 /CD1		
C	3	12'-0"	8'-0"		ALUM		X	X	X	17/CD1	17/CD1	21,23/CD1			
D	4	8'-3"	8'-0"		ALUM		X	X	X	17/CD1	17/CD1	21,23/CD1			
E	5	6'-6"	8'-0"		ALUM		X	X	X	17,CD1	17/CD1	21,23/CD1			
F	6	9'-8"	8'-0"		ALUM		X	X	X	17/CD1	17/CD1	21,23/CD1			
G	7	6'-0"	5'-0"		VINYL		X		X	19/CD1	19/CD1	22/CD1			
H	14	2'-0"	2'-0"		VINYL		X		X	19/CD1	19/CD1	3/CD1			
I	8	2'-0"	2'-0"		VINYL		X		X	19/CD1	19/CD1	22/CD1			
J	9	2'-0"	8'-0"		WOOD	X		X		18/CD1	18/CD1	24/CD1	12/CD1		
K	9	3'-0"	8'-0"		WOOD	X		X		18/CD1	18/CD1	24/CD1	12/CD1		
L	10	3'-0"	4'-6"		VINYL		X	X	X	19/CD1	19/CD1	22/CD1			
M	11	9'-0"	5'-0"		VINYL		X	X	X	19/CD1	19/CD1	22/CD1			
N	12	3'-0"	5'-0"		VINYL		X	X	X	19/CD1	19/CD1	22/CD1			
Q	7	6'-0"	5'-0"		VINYL		X		X	19/CD1	19/CD1	16/CD1			
P	7	3'-0"	8'-0"		ALUM		X		X	19/CD1	19/CD1	16/CD1			

STOREFRONT

WINDOW NOTES:

INSTALL DEVICES WHICH ALLOW WINDOWSTO BE LOCKED FROM THE INTERIOR

ALL WINDOWS SHALL BE DUAL GLAZED WITH WEATHER-STRIPPED OR LOW INFILTRATION FRAMES MEETING ANSI AIR INFILTRATION STANDARDS.

SAFETY GLAZING SHALL BE INSTALLED IN THE FOLLOWING LOCATIONS: PER (2010CSC 2406.3)

1. GLAZING IN SWINGING DOORS EXCEPT JALOUSIES
2. GLAZING IN FIXED AND SLIDING PANELS OF SLIDING DOOR ASSEMBLIES AND PANELS IN SLIDING AND BI-FOLD CLOSET DOOR ASSEMBLIES
3. GLAZING IN STORM DOORS
4. GLAZING IN UNFRAMED SWINGING DOORS
5. GLAZING IN DOORS AND ENCLOSURES FOR HOT TUBS, WHIRLPOOLS, SAUNAS, STEAM ROOMS, BATHTUBS AND SHOWERS. GLAZING IN ANY PORTION OF A BUILDING WALL ENCLOSING THESE COMPARTMENTS WHERE THE BOTTOM EXPOSED EDGE OF GLAZING IS LESS THAN 60" ABOVE A STANDING SURFACE.
6. GLAZING IN INDIVIDUAL FIXED OR OPERABLE PANEL ADJACENT TO A DOOR WHERE THE NEAREST EXPOSED EDGE OF THE GLAZING IS WITHIN A 24" ARC OF EITHER VERTICAL EDGE OF THE DOOR IN A CLOSED POSITION AND WHERE THE BOTTOM EXPOSED EDGE OF GLAZING IS LESS THAN 60" ABOVE THE WALKING SURFACE.

EXCEPTION:

AN INTERVENING WALL BETWEEN DOOR & GLAZING

WINDOW TYPES

WINDOW / ENERGY INFORMATION:
(SEE T-24 FOR INFORMATION)
GLAZING U-FACTOR = 0.29
SOLAR HEAT GAIN COEFFICIENT = 0.26

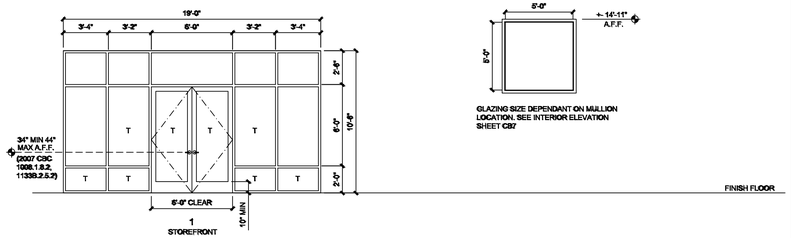

1
STOREFRONT

GLAZING SIZE DEPENDANT ON MULLION LOCATION. SEE INTERIOR ELEVATION SHEET C87

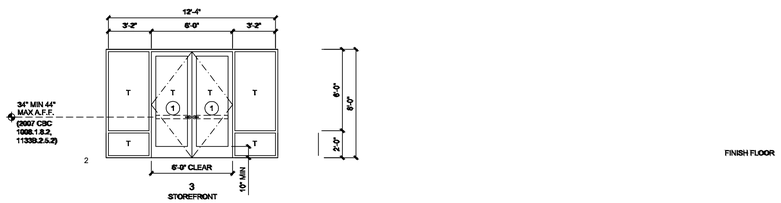

3
STOREFRONT

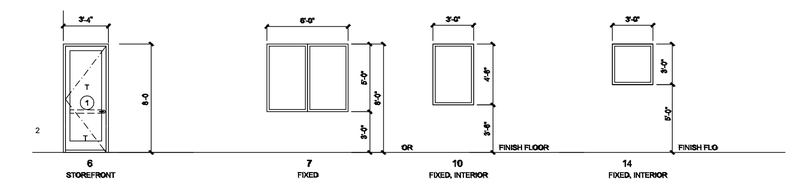

6
STOREFRONT

7
FIXED

10
FIXED, INTERIOR

14
FIXED, INTERIOR

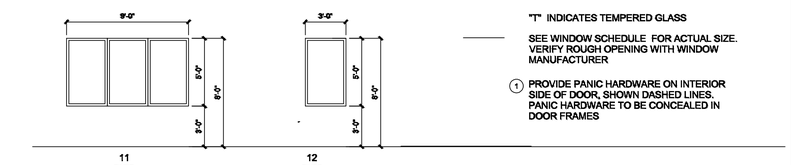

11
FIXED

12
FIXED

"T" INDICATES TEMPERED GLASS

SEE WINDOW SCHEDULE FOR ACTUAL SIZE. VERIFY ROUGH OPENING WITH WINDOW MANUFACTURER

(1) PROVIDE PANIC HARDWARE ON INTERIOR SIDE OF DOOR, SHOWN DASHED LINES. PANIC HARDWARE TO BE CONCEALED IN DOOR FRAMES

FINISH SCHEDULE

ROOM NUMBER		FLOOR	BASE	WALLS 1	WALLS 2	WALLS 3	WALLS 4	CEILING	CEILING HEIGHT	REMARKS
	ENTRY VESTIBULE	F4	B1	W1 P1	W1 P1	W1 P1	W1 P1	C1 P1	11'-0"	SHAW GROUP VIVID BLOOM 56041/04701
	OFFICE 1	F1	B1	W1 P1	W1 P1	W1 P1	W1 P1	C2	9'-0"	
	OFFICE 2	F1	B1	W1 P1	W1 P1	W1 P1	W1 P1	C2	9'-0"	
	COPY / STORAGE	F1	B1	W1 P1	W1 P1	W1 P1	W1 P1	C2	9'-0"	
	BUSINESS CENTER	F1	B1	W1 P1	W1 P1	W1 P1	W1 P1	C2	9'-0"	
	GREAT ROOM	F4	B1	W1 P1	W1 P1	W1 P1	W1 P1	C1 P1	11'-0"	SHAW GROUP VIVID BLOOM 56041/04701
	UTILITY ROOM 1	F3	B3	W3	W3	W3	W3	C3	9'-0"	
	UTILITY ROOM 2	F3	B3	W3	W3	W3	W3	C3	9'-0"	
	STORAGE	F2	B3	W1 P2	W1 P2	W1 P2	W1 P2	C2	9'-0"	
	MEN	F2	B3	W2 P2	W2 P2	W2 P2	W2 P2	C2	9'-0"	
	WOMEN	F2	B3	W2 P2	W2 P2	W2 P2	W2 P2	C2	9'-0"	
	KITCHEN	F2	B1	W1 P2	W1 P2	W1 P2	W1 P2	C2	9'-0"	
	HALL	F2	B1	W1 P1	W1 P1	W1 P1	W1 P1	C2	9'-0"	
	FITNESS	F4	B1	W1 P2	W1 P2	W1 P2	W1 P2	C1 P2	11'-0"	SHAW GROUP VIVID BLOOM 56041/04701

FINISH LEGENDS

FLOORS
- F1 CARPET
- F2 SHEET VINYL
- F3 CONCRETE SMOOTH FINISH SEALED
- F4 CARPET TILE

BASE
- B1 4" MDF BASE
- B2 NOT USED
- B3 6" RUBBER BASE

WALLS
- W1 GYPSUM BOARD, LEVEL 5 SMOOTH FINISH
- W2 COLORED FRP PANELS TO 4' ABOVE F.F.
- W3 GYPSUM BOARD TAPED & TOPPED JOINTS

CEILINGS
- C1 GYPSUM BOARD SPRAYED ON FINISH
- C2 SUSPENDED TILE CEILING
- C3 GYPSUM BOARD TAPED & TOPPED JOINTS

PAINT
- P1 PAINT FLAT LATEX
- P2 PAINT SEMI GLOSS

GENERAL FINISH NOTES

1. PAINT HVAC REGISTERS TO MATCH THE COLOR OF THE WALL ON WHICH THEY OCCUR
2. PAINT SECURITY CAMERA HOUSING TO MATCH COLOR OF SURFACE ON WHICH CAMERA OCCURS
3. SQUARE ALL OUTSIDE CORNERS AT WALL, CEILINGS HEADERS, ARCHES SOFFITS, NICHES, DOORS, WINDOWS, ETC.

DOOR SCHEDULE

DOOR MARK	DOOR TYPE	SIZE WIDTH	SIZE HEIGHT	SIZE THICK	FRAME TYPE	MATERIAL	GLAZING SINGLE	GLAZING DOUBLE	GLAZING TEMPERED LOW E	DETAILS HEAD	DETAILS JAMB	DETAILS THRESH	HDWR TRAN	HDWR GROUP NO	HDWR KEY SIDE	REMARKS
1	1	3'-0"	8'-0"	1 3/8"		WD. GL	X		X	6/CD1	6/CD1					
2	1	3'-0"	8'-0"	1 3/8"		WD. GL	X		X	6/CD1	6/CD1					
3	3	3'-0"	8'-0"	1 3/8"		WD.				4/CD1	4/CD1					
4	3	3'-0"	8'-0"	1 3/8"		WD.				4/CD1	4/CD1					
5	1	3'-0"	8'-0"	1 3/8"		WD. GL	X		X	6/CD1	6/CD1					
6	6	3'-0"	8'-0"	1 3/4"		METAL				5/CD1	11/CD1	21/CD1				
7	1	3'-0"	8'-0"	1 3/8"		WD. GL	X		X	6/CD1	6/CD1					
8	1	3'-0"	8'-0"	1 3/8"		WD. GL	X		X	6/CD1	6/CD1					
9	1	3'-0"	8'-0"	1 3/8"		WD. GL	X		X	6/CD1	6/CD1					
10	4	3'-0"	6'-8"	1 3/8"		WD.				4/CD1	4/CD1					
11	4	3'-0"	8'-0"	1 3/8"		WD.				4/CD1	4/CD1					
12	2	3'-0"	8'-0"	1 3/8"		WD.				6/CD1	6/CD1					
13	5	3'-0"	8'-0"	1 3/4"		METAL				5/CD1	11/CD1	21/CD1				

SEE SHEET A4.10

DOOR TYPES

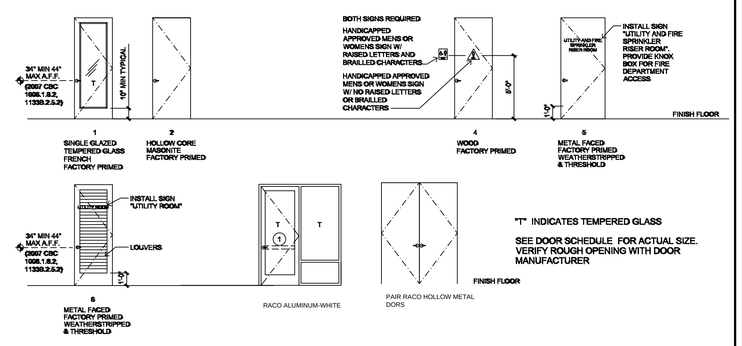

1
SINGLE GLAZED TEMPERED GLASS FRENCH FACTORY PRIMED

2
HOLLOW CORE MASONITE FACTORY PRIMED

4
WOOD FACTORY PRIMED

5
METAL FACED FACTORY PRIMED WEATHERSTRIPPED & THRESHOLD

6
METAL FACED FACTORY PRIMED WEATHERSTRIPPED & THRESHOLD

RACO ALUMINUM-WHITE

"T" INDICATES TEMPERED GLASS

SEE DOOR SCHEDULE FOR ACTUAL SIZE. VERIFY ROUGH OPENING WITH DOOR MANUFACTURER

DOOR NOTES

1. ALL DOORS PROVIDED FOR EGRESS PURPOSES SHALL COMPLY WITH THE PROVISIONS IN (2010CSC)
2. ALL DOORS WILL BE OPERABLE FROM THE INSIDE WITHOUT THE USE OF A KEY O r ANY SPECIAL KNOWLEDGE OR EFFORT (2010 CSC 1008.1.8)
3. UNLATCHING OF ANY COMMON AREA DOOR SHALL NOT REQUIRE MORE THAN 1 OPERATION. (2010 CSC 1008.1.9.3)
4. ALL EXTERIOR DOORS SHALL BE FULLY WEATHERSTRIPPED.
5. PROVIDE INSULATED DOORS BETWEEN ALL CONDITIONED AND NON CONDITIONED SPACES
6. PROVIDE SELF CLOSING DOORS WITH SMOKE AND DRAFT CONTROL ASSEMBLIES FOR ALL DOORS OPENING INTO THE CORRIDORS.
7. SEE COMMUNITY CENTER KEYNOTES ON SHEET C52 FOR NOTES REGARDING SIGNAGE
8. PROVIDE KNOX BOX AT ELECTRICAL / FIRE ROOM 1 DOOR #14 PER THE CITY OF VALLEJO FIRE DEPARTMENT STANDARDS

HANDICAPPED ACCESSIBILITY NOTES

HC1 HANDICAPPED ACCESSIBILITY REQUIREMENTS (2010 CSC CHAPTER 11B)

HC2 ALL HAND ACTIVATED DOOR OPENING HARDWARE REQUIRED FOR EXITING SHALL BE LEVER TYPE. (2010 CSC 11338.2.5.2)

HC3 LEVER TYPE HARDWARE SHALL RETURN TO WITHIN 1/2" OF THE DOOR FACE

HC4 DOORS WITH CLOSERS: THE SWEEP PERIOD OF THE CLOSER SHALL BE ADJUSTED SO THAT FROM AN OPEN POSITION OF 70 DEGREES, THE DOOR WILL TAKE @ LEAST 3 SECONDS TO MOVE TO A POINT 3" FROM THE LATCH, MEASURED TO THE LEADING EDGE OF THE DOOR (2010CSC 11338.2.5.1)

HC5 MAXIMUM EFFORT TO OPERATE DOORS SHALL NOT EXCEED 5 POUNDS FOR EXTERIOR DOORS AND 5 POUNDS FOR INTERIOR DOORS. MAXIMUM EFFORT OF 15 POUNDS FOR FIRE DOORS IF ALLOWED BY BUILDING OFFICIAL (2010 CSC 11338.2.5.1, 11338.2.5)

HC6 THE BOTTOM 10" OF ALL DOORS AND GATES SHALL HAVE A SMOOTH SURFACE ON THE PUSH SIDE OF THE DOOR TO ALLOW THE DOOR TO BE OPENED WITH A WHEELCHAIR FOOTREST WITHOUT A TRAP OR CONDITION (2010 CSC 11338.2.6) (MAY REQUIRED LOWER ARMS OF PANIC HARDWARE TO BE CONCEALED INSIDE DOOR.)

REVISIONS	BY
9/26/2011 – PLAN CHECK	G.O.
01/20/2014– BIDDING	LR
01/27/2014– BIDDING	JO

LICENSED ARCHITECT JOSEPH OAKLEY No. 15457 REN. 9-30-14 STATE OF CALIFORNIA

OAKLEY & OAKLEY
ARCHITECT, CIVIL & STRUCTURAL ENGINEERS
OAKLAND, CA 94621 1329 7TH AVE
PHONE 510.562.6043
FAX 510.562.6043

PROJECT TITLE:
COMMUNITY CENTER
HARBOR PARK APARTMENTS
969 PORTER STREET, VALLEJO, CA 94560

DRAWING TITLE:
DOOR, WINDOW & FINISH SCHEDULE

Date:	08/30/2011
Scale:	AS NOTED
Drawn:	STAFF
Checked:	RY
Job No.:	2011-09
Sheet:	A4.1
Of	Sheets

Jan 27, 2014 - 5:21pm \\SERVER\Server Drive D\Year 2011 Jobs\2011-09.3 - Community Bldg\REVISED DRAWINGS FOR NEGOTIATED CONTRACT WITH WE LYONS\ARCHITECTUA4.1ST - Finish Plan And Finish Schedule REVISED FOR WELYONS BID DOORS.dwg

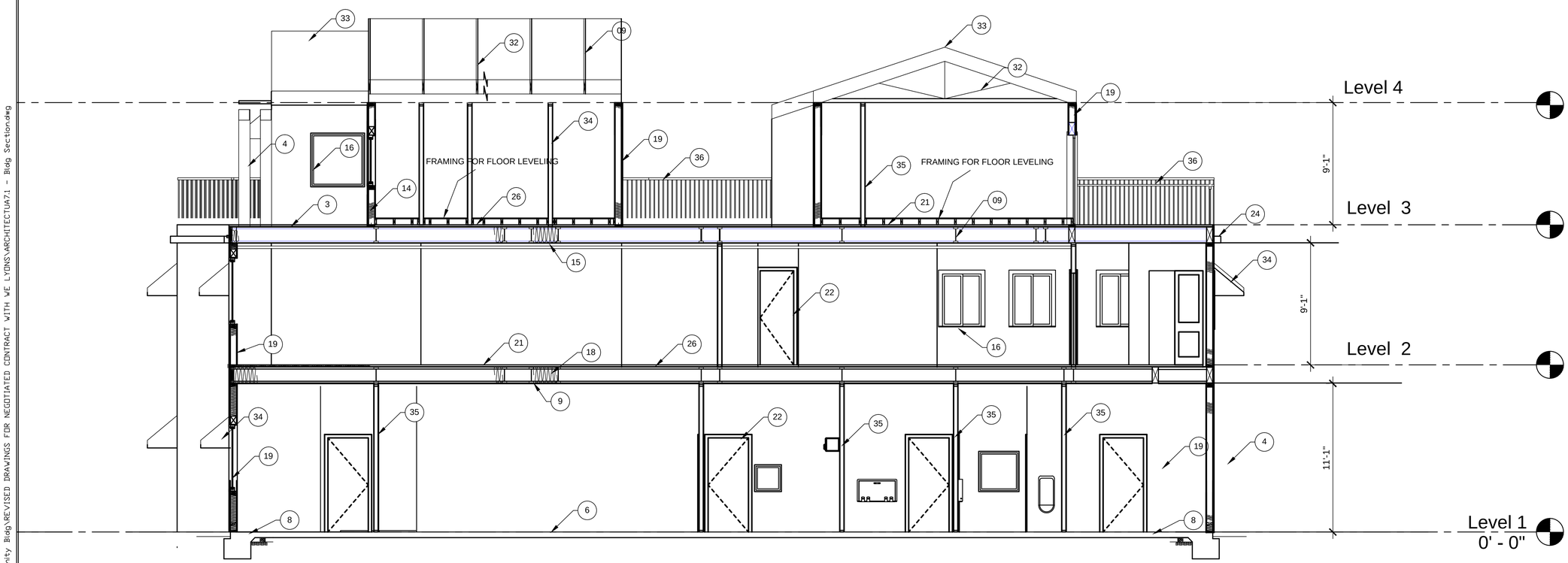

01 BUILDING SECTION

SCALE: 1/4" = 1'-0"

GENERAL NOTES

A. ALL DIMENSIONS ARE TO FACE OF STUD OR CENTERLINE OF PARTITION WALL, INTERIOR COLUMN/ WINDOW/ DOOR UNLESS OTHERWISE NOTED.

B. DETAILS ARE KEYED AND NOTED "TYPICAL" ONLY ONCE ON THE PLANS WHEN THEY FIRST OCCUR, AND ARE REPRESENTATIVE OF SIMILAR CONDITIONS THROUGHOUT, UNLESS OTHERWISE NOTED.

KEYNOTES

01 CEMENT PLASTER 0/2 LAYERS GRADE D BLDG. PAPER/O 1/2" PLYWD.
2 ALUMINUM STOREFRONT SYSTEM. SEE DET. SHEET A8.1
3 BUILT UP ROOFING
4 WD. TRELLIS.
5 ROOF CRICKET.
6 CONCRETE SLAB-ON-GRADE. SSD
7 STEEL BEAM. SSD
8 CONCRETE FOOTING, SSD
9 T.J.I. JOISTS @ 16 & 24" O.C. MAX. SSD.
10 5/8 THK. PLYWOOD SHEATING. SSD.
11 ALUMINUM WINDOW SYSTEM.
12 5/8" THK. PLYWD. SHEATING.
13 WD. HEADER. SEE STRUCTURAL DWGS.
14 STEEL COLUMN. SSD.
15 5/8" THK. TYPE " X" GYPSUM BD.
16 VINYL WINDOW.
17 5/8" THK. GYPSUM BD.
18 ROOF INSULATION PER TITLE 24
19 2X6 WD. STUD FRAMING. SSD.
20 BATT INSULATION PER TITLE 24
21 FINISH FLOOR. SEE FINISH SCHEDULE A4.1
22 WOOD DOOR. SEE SHEET A9.1
23 ROOF DRAIN AND OVERFLOW.
24 EPS TRIM.
25 2" ALUMINUM REVEAL.
26 1-1/2" GYP.CRETE. SEE STRUCTURAL DWGS.
27 PLASTER WEEP SCREED.
28 WD. BEAM. SEE SSD
29 MTL. GA. DOWNSPOUT
30 SHEET METAL CAP FLASHING /O BUILT UP ROOFING
31 SLOPE ROOF TO DRAIN AT 1/4" PER FOOT
32 PREFABRICATED ROOF TRUSSES @ 24" O.C.
33 ASPHLT SHINGLES OVER ⅝" PLYWOOD (32/16) OVER 15 LB. FELT
34 WINDOW AWNINGS
35 2X4 WOOD STUDS WITH ⅝" TYPE X GYP. BD. EACH SIDE.
36 METAL RAILING
37 FLORR FURRING FOR ROOF SLOPE AND FLOOR LEVELING
38 RIPPED 2X @ 16" O.C.
39 2X4 SLEEPERS @ 24" O.C.
40 ⅝" PLYWOOD WITH 10D @ 6" O.C. AT PANEL EDGES
41 3-10D TOES @ EACH SLEEPER
42 2X SOLID LEDGER WITH 6-16D EA STUD
43 2-16D EACH JOIST BELOW ROOF SHEATHING

LEGEND

REVISIONS	BY
9/26/2011 – PLAN CHECK	G.O.

LICENSED ARCHITECT
JOSEPH OAKLEY III
No. 15457
REN. 9-30-11
STATE OF CALIFORNIA

OAKLEY & OAKLEY
ARCHITECT/CIVIL & STRUCTURAL ENGINEERS
700 ADEWATER DRIVE
510.562.6028
FAX 510.562.6043

PROJECT TITLE:
COMMUNITY CENTER
HARBOR PARK APARTMENTS
969 PORTER STREET, VALLEJO, CA 94560

DRAWING TITLE:
BUILDING SECTIONS

Date:	04/17/2012
Scale:	AS NOTED
Drawn:	STAFF
Checked:	RY
Job No.:	2011-09
Sheet:	A7.1
Of	Sheets

Jan 27, 2014 - 6:48pm \\SERVER\Server Drive D\Year 2011 Jobs\2011-09.3 - Community Bldg\REVISED DRAWINGS FOR NEGOTIATED CONTRACT WITH WE LYONS\ARCHITECTUA7.1 - Bldg Section.dwg

01 BUILDING SECTION

SCALE: 1/4" = 1'-0"

GENERAL NOTES

A. ALL DIMENSIONS ARE TO FACE OF STUD OR CENTERLINE OF PARTITION WALL, INTERIOR COLUMN/ WINDOW/ DOOR UNLESS OTHERWISE NOTED.

B. DETAILS ARE KEYED AND NOTED 'TYPICAL' ONLY ONCE ON THE PLANS WHEN THEY FIRST OCCUR, AND ARE REPRESENTATIVE OF SIMILAR CONDITIONS THROUGHOUT, UNLESS OTHERWISE NOTED.

KEYNOTES

01 CEMENT PLASTER O/2 LAYERS GRADE D BLDG. PAPER/O 1/2" PLYWD.
2 ALUMINUM STOREFRONT SYSTEM. SEE DET. SHEET A8.1
3 BUILT UP ROOFING
4 WD. TRELLIS.
5 ROOF CRICKET.
6 CONCRETE SLAB-ON-GRADE. SSD
7 STEEL BEAM. SSD
8 CONCRETE FOOTING, SSD
9 T.J.I. JOISTS @ 16 & 24" O.C. MAX. SSD.
10 3/4 THK. PLYWOOD SHEATING. SSD.
11 ALUMINUM WINDOW SYSTEM.
12 3/4" THK. PLYWD. SHEATING.
13 WD. HEADER. SEE STRUCTURAL DWGS.
14 STEEL COLUMN. SSD.
15 5/8" THK. TYPE " X" GYPSUM BD.
16 VINYL WINDOW.
17 5/8" THK. GYPSUM BD.
18 ROOF INSULATION PER TITLE 24
19 2X6 WD. STUD FRAMING. SSD.
20 BATT INSULATION PER TITLE 24
21 FINISH FLOOR. SEE FINISH SCHEDULE A4.1
22 WOOD DOOR. SEE SHEET A9.1
23 ROOF DRAIN AND OVERFLOW.
24 EPS TRIM.
25 2" ALUMINUM REVEAL.
26 1-1/2" GYP.CRETE. SEE STRUCTURAL DWGS.
27 PLASTER WEEP SCREED.
28 WD. BEAM. SEE SSD
29 MTL. GA. DOWNSPOUT
30 SHEET METAL CAP FLASHING /O TPO ROOFING O/ 1 LAYER OF BITUTHENE
31 SLOPE ROOF DRAIN 1/2"=1'-0"
32 PREFABRICATED ROOF TRUSSES @ 24" O.C.
33 ASPHLT SHINGLES OVER 5/8" PLYWOOD (32/16) OVER 15 LB. FELT
34 WINDOW AWNINGS
35 2X4 WOOD STUDS WITH 5/8" TYPE X GYP. BD. EACH SIDE.
36 METAL RAILING
37 FLOOR FURRING FOR ROOF SLOPE AND FLOOR LEVELING
38 RIPPED 2X @ 16" O.C.
39 2X4 SLEEPERS @ 24" O.C.
40 5/8" PLYWOOD WITH 10D @ 6" O.C. AT PANEL EDGES
41 3-10D TOES @ EACH SLEEPER
42 2X SOLID LEDGER WITH 6-16D EA STUD
43 2-16D EACH JOIST BELOW ROOF SHEATHING

LEGEND

REVISIONS	BY
9/26/2011 – PLAN CHECK	G.O.
01/18/2014 – BIDDING	LR.

LICENSED ARCHITECT
JOSEPH OAKLEY III
No. 15457
REN. 9-30-11
STATE OF CALIFORNIA

OAKLEY & OAKLEY
ARCHITECT, CIVIL & STRUCTURAL ENGINEERS
7000 EDGEWATER DRIVE, STE. 615
OAKLAND, CA 94621
510.562.6028 FAX 510.562.6043

PROJECT TITLE:
COMMUNITY CENTER
HARBOR PARK APARTMENTS
969 PORTER STREET, VALLEJO, CA 94560

DRAWING TITLE:
BUILDING SECTION

Date:	04/17/2012
Scale:	AS NOTED
Drawn:	STAFF
Checked:	RY
Job No.:	2011-09
Sheet:	A7.2
Of	Sheets

Jan 27, 2014 - 6:51pm \\SERVER\Server Drive D\Year 2011 Jobs\2011-09.3 - Community Bldg\REVISED DRAWINGS FOR NEGOTIATED CONTRACT WITH WE LYONS\ARCHITECTUA7.2 - Bldg Section.dwg

DOOR MARK	DOOR TYPE	NOMINAL SIZE WIDTH PER LEAF	NOMINAL SIZE HT	NOMINAL SIZE THK	MTL	FIN	GLASS	LOUVER W	LOUVER HT	FRAME CORE	FRAME TYPE	DETAILS JAMB	DETAILS HEAD	DETAILS SILL	HARDWARE GROUP	SIGNAGE	FIRE RATING HR	REMARKS
UNITS A, B, C																		
1	1	3'-0"	6'-8"	1 3/4"	FG	PAINT		–	–	SC		11/9.2	5/9.2	21/9.2	1			3/4" UNDERCUT AT DOORS AT CAROET FINISH
2	2	3'-0"	6'-8"		WOOD	PAINT	TEMP			–				21/9.2	1			
3	3	2'-4"	6'-8"		FG OR	PAINT				HC/SS		12/9.2	6/9.2		2			
					MDF													
4	4	2'-6"	6'-8"	1 3/4"	FG OR	PAINT		–	–	HC/SS		12/9.2	6/9.2					
					MDF													
5	5	2'-10"	6'-8"		FG OR	PAINT				HC/SS		12/9.2	6/9.2		2			
					MDF													
6	6	2'-10"	6'-8"	1 3/4"	FG OR	PAINT				HC/SS		12/9.2	6/9.2					
					MDF													
7	5	2'-10"	6'-8"			PAINT				HC/SS		12/9.2	6/9.2		3			
					MDF													
8	5	2'-10"	6'-8"		FG OR	PAINT				HC/SS		12/9.2	6/9.2					
					MDF													

01 DOOR SCHEDULE

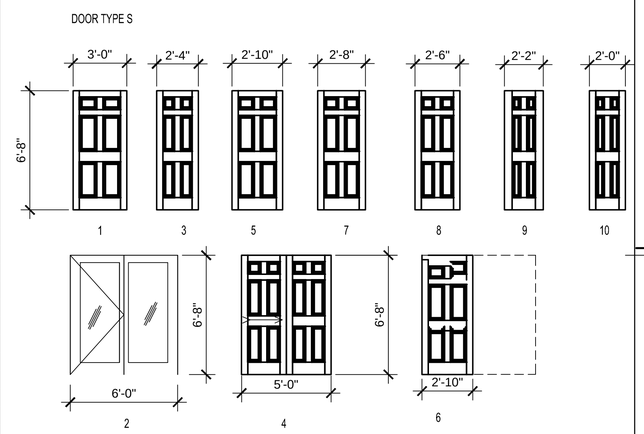

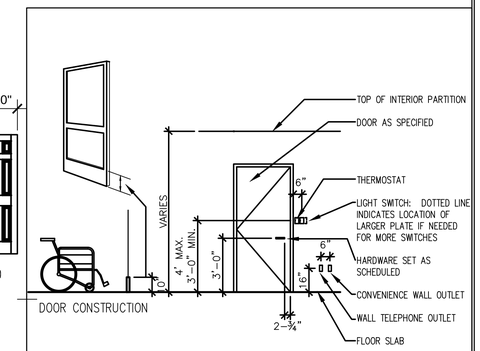

NOTE: LOCATE ELECTRICAL AND TELEPHONE WALL OUTLETS AND SWITCH PLATES AT NEAREST STUD FROM SCALED LOCATION ON PLAN UNLESS OTHERWISE SPECIFICALLY NOTED.

06 TYP. DOOR MOUNTING HEIGHTS

SCALE: 1/4"=1'-0"

02 FRAME AND DOOR TYPES

A THRESHOLD HEIGHT SHALL NOT EXCEED 1/2" MAX. (ABOVE FLOOR AND LANDING ON BOTH SIDES) AT BUILDING ENTRANCE AND ALL DOORS, SEE DET. 21/A9.2

B FOR DOOR FINISHES REFER TO SPECIFICATION.

C SEE 6/A9.1 FOR TYP. MOUNTING HEIGHTS FOR DOOR HARDWARE.

D ALL HARDWARE AT ACCESSIBLE DOORS SHALL COMPLY W/ CBC, CHAPTER 10 AND TITLE 24 (1,2).

E ALL DOOR FRAMES SHALL BE INSTALLED WITH 3 DOOR SILENCERS U.O.N.

F EXIT DOORS SHALL BE OPERABLE FROM THE INSIDE WITHOUT THE USE OF KEY OR SPECIAL EFFORT PER LOCAL CODE. LEVER TYPE HARDWARE SHALL BE USED THROUGHOUT – SCHLAGE RHODES LEVER, U.N.O. AND WHICH WILL COMPLY WITH CBC 1003.3.1.8

G MAXIMUM EFFORT TO OPERATE DOORS SHALL NOT EXCEED 5 POUNDS FOR EXTERIOR DOORS AND 5 POUNDS FOR INTERIOR DOORS. WHEN FIRE DOORS ARE REQUIRED, THE MAXIMUM EFFORT TO OPERATE DOOR MAY BE INCREASED NOT TO EXCEED 15 POUNDS.

H WHILE THE HARDWARE SCHEDULE IS INTENDED TO COVER ALL DOORS OF THE BUILDING, AND TO ESTABLISH A TYPE AND STANDARD OF QUALITY, IT SHALL BE THE SPECIFIC DUTY AND RESPONSIBILITY OF THE FINISH HARDWARE SUPPLIER TO EXAMINE THE PLANS AND SPECIFICATIONS, AND FURNISH PROPER HARDWARE FOR ALL OPENINGS WHETHER LISTED OR NOT.

I IF THERE ARE OMISSIONS IN HARDWARE GROUPS, THEY SHALL BE CALLED TO THE ATTENTION OF THE ARCHITECT/ENGINEER FOR INSTRUCTIONS.

J ALL DOORS SWINGING OVER CARPETED AREAS SHALL BE UNDERCUT TO CLEAR FINISHED FLOOR.

K PROVIDE INTERNATIONAL SYMBOL OF ACCESSIBILITY AT THE MAIN ENTRANCE. (MOUNT @ 60" A.F.F.) PER 2007 CBC 1117B.5.

L X

M HARDWARE GROUP: REFER TO SPECIFICATION FOR DESCRIPTION OF HARDWARE CONTAINED WITHIN GROUPING.

N CONTRACTOR TO VERIFY ALL ROUGH OPENING DIMENSIONS AS REQUIRED TO MATCH DOOR SIZE SHOWN.

P FOR DOOR AND FRAME DETAILS REFER TO SHEET AX.1

Q ROOM NUMBERS AND BUILDING SIGNAGE TO BE VANDAL RESISTANT.

R ALL INTERIOR DOORS TO BE STAVE CORE HOOD DOORS.

S PROVIDE WEATHER STRIPPING AT ALL EXTERIOR DOORS.

03 GENERAL NOTES

ABBREVIATIONS

WD	WOOD
MTL	METAL
DH	DOOR HEIGHT, SEE SCHEDULE
PT	PAINT
LG	LAMINATED GLASS
HM	HOLLOW METAL DOOR
ANOD	ANODIZED
PF	PREFINISHED
FB	FIBERGLASS
MDF	MOLDED WOOD COPOSITE
PF	PREFINISHED
SC	SOLID CORE
HC/SS	HOLLOW CORE,SOLID STILE

DOOR SCHED. SYMBOL

WINDOW / ENERGY INFORMATION:
(SEE T-24 FOR INFORMATION)
GLAZING U-FACTOR = 0.29
SOLAR HEAT GAIN COEFFICIENT = 0.26

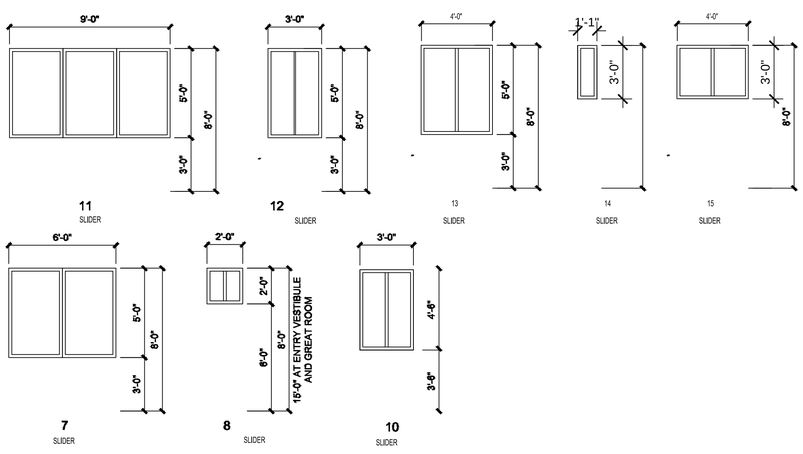

04 WINDOW TYPE

WINDOW MARK	WINDOW TYPE	SIZE WIDTH	SIZE HEIGHT	FRAME TYPE	MATERIAL	GLAZING SINGLE	GLAZING DOUBLE	GLAZING TEMP	GLAZING LOW E	DETAILS HEAD	DETAILS JAMB	DETAILS SILL	DETAILS MULL	RATING	REMARKS
G	7	6'-0"	5'-0"		VINYL		X		X	10/CD1	10/CD1	22/CD1			
M	11	9'-0"	5'-0"		VINYL		X	X	X	10/CD1	10/CD1	22/CD1			
N	12	3'-0"	5'-0"		VINYL		X	X	X	10/CD1	10/CD1	22/CD1			
O	7	6'-0"	5'-0"		VINYL		X		X	10/CD1	10/CD1	16/CD1			
P	7	3'-0"	8'-0"		ALUM		X		X	10/CD1	10/CD1	16/CD1			
Q	13	4'-0"	5'-0"		VINYL		X		X	10/CD1	10/CD1	22/CD1			
R	14	1'-0"	5'-0"		VINYL		X		X	10/CD1	10/CD1	22/CD1			
S	15	4'-0"	3'-0"		VINYL		X		X	10/CD1	10/CD1	22/CD1			

WINDOW NOTES:

INSTALL DEVICES WHICH ALLOW WINDOWSTO BE LOCKED FROMTHEINTERIOR

ALL WINDOWS SHALL BE DUAL GLAZED WITH WEATHER-STRIPPEDDOOR INFILTRATION FRAMES MEETING ANSI AIR INFILTRATION STANDARDS.

SAFETY GLAZING SHALL BE INSTALLED IN THE FOLLOWING LOCATIONS: PER (2010CBC 2406.3)

1. GLAZING IN SWINGING DOORS EXCEPT JALOUSIES
2. GLAZING IN FIXED AND SLIDING PANELS OF SLIDING DOOR ASSEMBLIES AND PANELS IN SLIDING AND BI-FOLD CLOSET DOOR ASSEMBLIES
3. GLAZING IN STORM DOORS
4. GLAZING IN UNFRAMED SWINGING DOORS
5. GLAZING IN DOORS AND ENCLOSURES FOR HOT TUBS, WHIRLPOOLS, SAUNAS, STEAM ROOMS, BATHTUBS AND SHOWERS. GLAZING IN ANY PORTION OF A BUILDING WALL ENCLOSING THESE COMPARTMENTS WHERE THE BOTTOM EXPOSED EDGE OF GLAZING IS LESS THAN 60" ABOVE A STANDING SURFACE.
6. GLAZING IN INDIVIDUAL FIXED OR OPERABLE PANEL ADJACENT TO A DOOR WHERE THE NEAREST EXPOSED EDGE OF THE GLAZING IS WITHIN A 24" ARC OF EITHER VERTICAL EDGE OF THE DOOR IN A CLOSED POSITION AND WHERE THE BOTTOM EXPOSED EDGE OF GLAZING IS LESS THAN 60" ABOVE THE WALKING SURFACE.

EXCEPTION:

AN INTERVENING WALL BETWEEN DOOR & GLAZING

05 WINDOW SCHED. SYMBOL

REVISIONS	BY
9/26/2011 – PLAN CHECK	G.O.

LICENSED ARCHITECT JOSEPH OAKLEY JR. No. 15457 REN. 9-30-11 STATE OF CALIFORNIA

OAKLEY & OAKLEY
ARCHITECT.CIVIL & STRUCTURAL ENGINEERS
770 DADGEWATER DRIVE STE 615
SUISUN CITY, CA 94585
510.562.6028 & 621
FAX 510.562.6043

PROJECT TITLE:
COMMUNITY CENTER
HARBOR PARK APARTMENTS
969 PORTER STREET, VALLEJO, CA 94560

DRAWING TITLE:
DOOR & WINDOW SCHEDULE

Date: 04/17/2012
Scale: AS NOTED
Drawn: STAFF
Checked: RY
Job No.: 2011–09
Sheet: A9.1
Of Sheets

Jan 19, 2014 – 3:12pm Z:\Year 2011 Jobs\2011-093 – Community Bldg\REVISED DRAWINGS FOR NEGOTIATED CONTRACT WITH WE LYONS\ARCHITECTURE\A9.1 – Door Window And Frame Sched.dwg

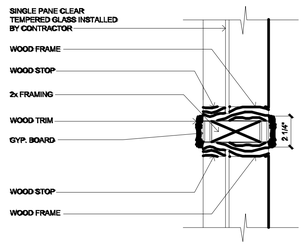

1 WINDOW JAMB
SCALE 3" = 1'-0"

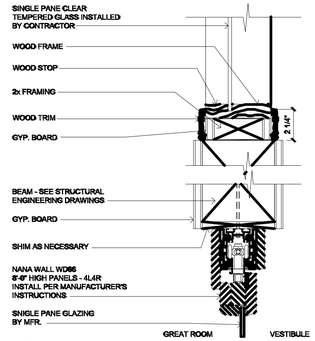

2 SILL / HEAD DETAIL
SCALE 3" = 1'-0"

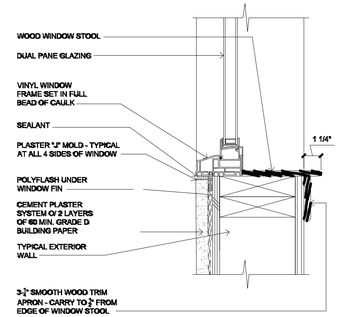

3 WINDOW SILL
SCALE 3" = 1'-0"

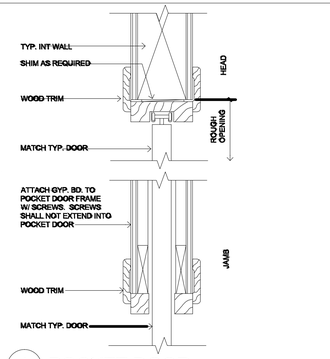

4 POCKET DOOR
SCALE 3" = 1'-0"

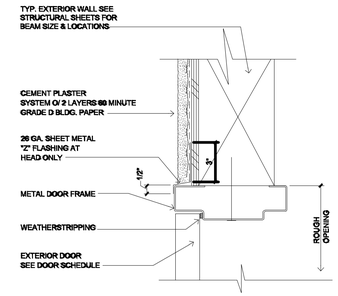

5 DOOR HEAD
SCALE 3" = 1'-0"

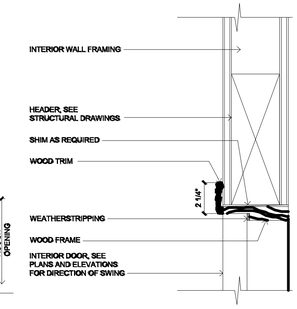

6 DOOR HEAD / JAMB SIMILAR
SCALE 3" = 1'-0"

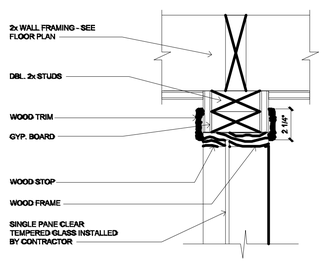

7 WINDOW JAMB / HEAD SIMILAR
SCALE 3" = 1'-0"

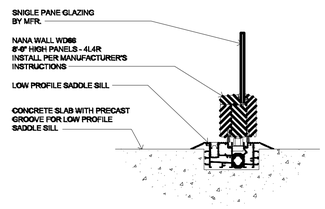

8 SILL DETAIL
SCALE 3" = 1'-0"

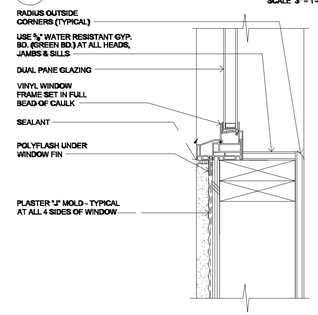

9 WINDOW SILL
SCALE 3" = 1'-0"

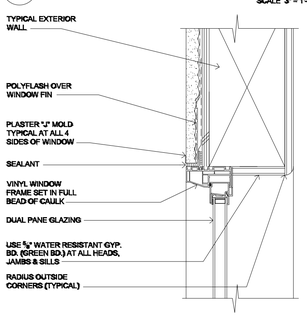

10 WINDOW HEAD / JAMB SIMILAR
SCALE 3" = 1'-0"

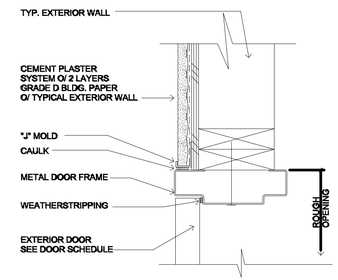

11 DOOR JAMB
SCALE 3" = 1'-0"

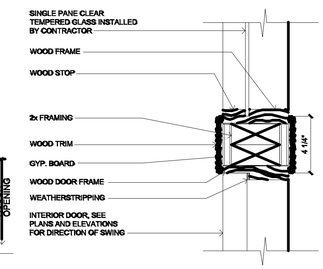

12 DOOR / WINDOW JAMB
SCALE 3" = 1'-0"

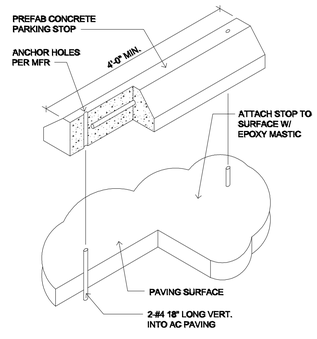

13 CONCRETE PARKING STOP
SCALE 1/2" = 1'-0"

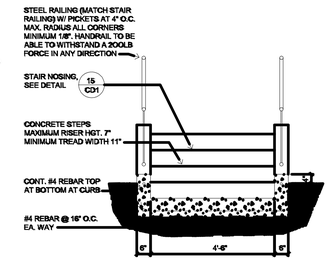

14 SITE STAIR SECTION
SCALE 1/2" = 1'-0"

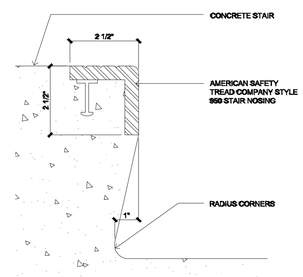

15 EXT. STAIR NOSING
SCALE 6" = 1'-0"

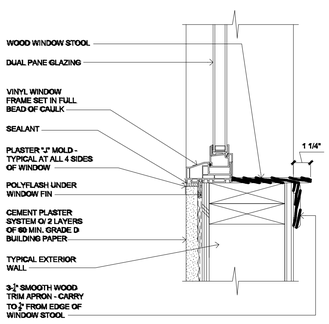

16 WINDOW SILL
SCALE 3" = 1'-0"

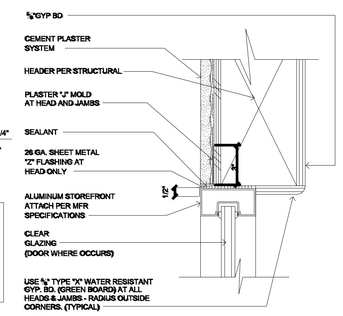

17 STOREFRONT HEAD JAMB SIM.
SCALE 3" = 1'-0"

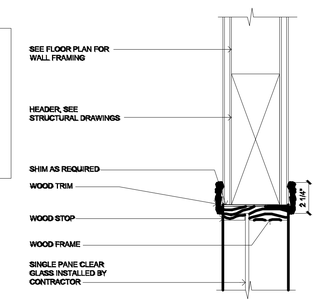

18 WINDOW HEAD / JAMB SIMILAR
SCALE 3" = 1'-0"

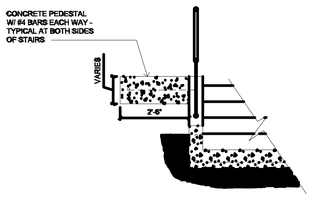

19 SITE STAIR SECTION
SCALE 1/2" = 1'-0"

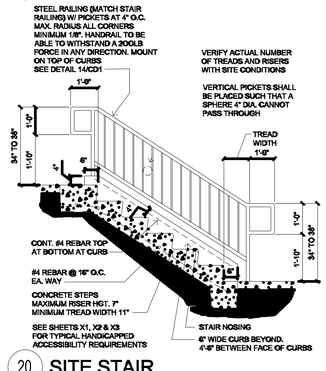

20 SITE STAIR
SCALE 1/2" = 1'-0"

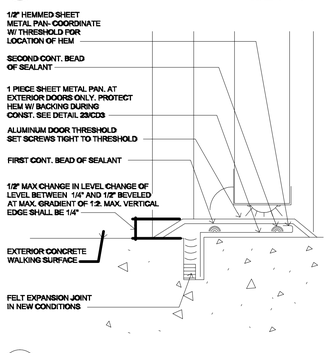

21 DOOR THRESHOLD
SCALE 6" = 1'-0"

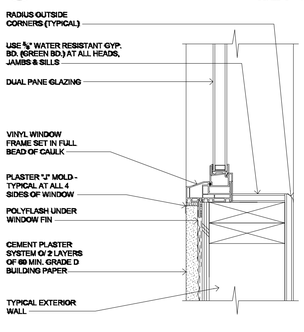

22 WINDOW SILL
SCALE 3" = 1'-0"

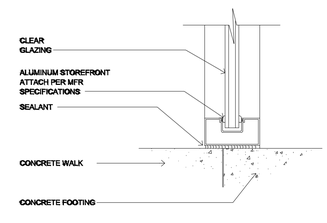

23 STOREFRONT SILL
SCALE 3" = 1'-0"

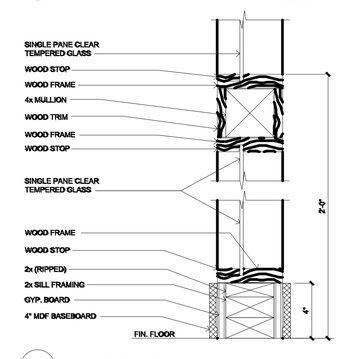

27 WINDOW SILL
SCALE 3" = 1'-0"

REVISIONS	BY
9/26/2011 - PLAN CHECK	G.O.

LICENSED ARCHITECT
JOSEPH OAKLEY
No. 15457
REN. 9-30-11
STATE OF CALIFORNIA

OAKLEY & OAKLEY
ARCHITECT, CIVIL & STRUCTURAL ENGINEERS
OAKLAND, CA 94621
OAKLAND, CA 94621
1330 BROADWAY, STE. 615
P H O N E 510.562.6043
F A X 510.562.6043

PROJECT TITLE:
COMMUNITY CENTER
HARBOR PARK APARTMENTS
969 PORTER STREET, VALLEJO, CA 94560

DRAWING TITLE:
ARCHITECTURAL DETAILS

Date:	04/17/2012
Scale:	AS NOTED
Drawn:	STAFF
Checked:	RY
Job No.:	2011-09
Sheet:	A9.2
Of	Sheets

Jan 20, 2014 - 8:03am \\Server\server drive d\Year 2011 Jobs\2011-09.3 - Community Bldg\REVISED DRAWINGS FOR NEGOTIATED CONTRACT WITH WE LYONS\ARCHITECTRA92.dwg

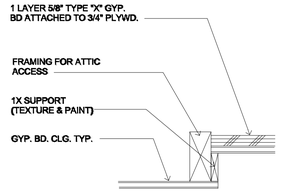

1 ATTIC ACCESS HATCH SCALE 3" = 1'-0"

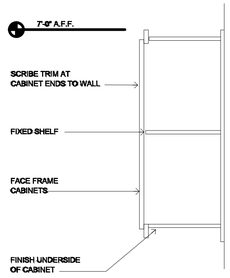

2 UPPER CABINET SCALE 1 1/2" = 1'-0"

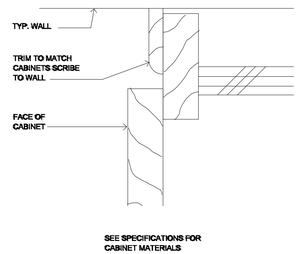

3 CABINET AT WALL FULL SCALE

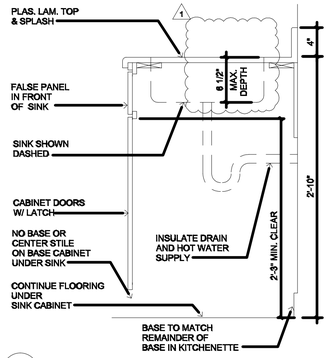

4 BASE CABINET SCALE 1 1/2" = 1'-0"
WHEEL CHAIR ACCESSIBLE

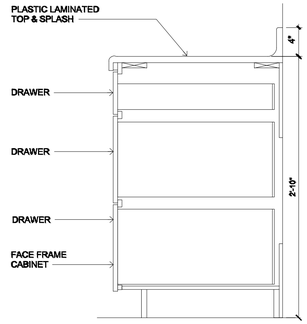

5 BASE CABINET SCALE 1 1/2" = 1'-0"

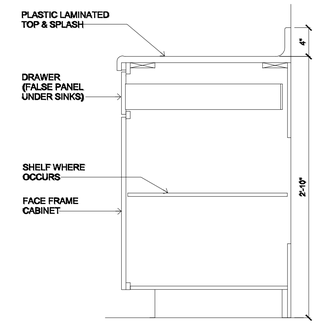

6 BASE CABINET SCALE 1 1/2" = 1'-0"

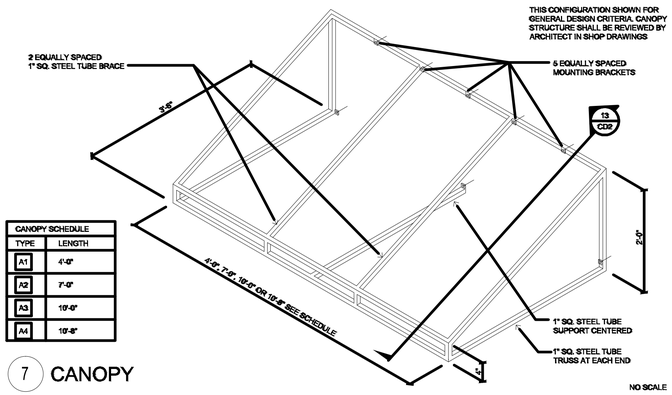

CANOPY SCHEDULE	
TYPE	LENGTH
A1	4'-0"
A2	7'-0"
A3	10'-0"
A4	13'-0"

7 CANOPY NO SCALE

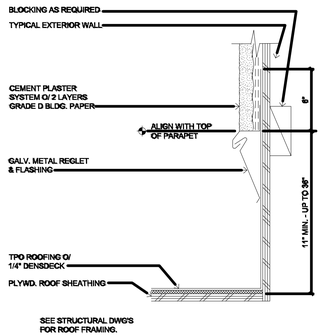

9 ROOF @ WALL SCALE 3" = 1'-0"

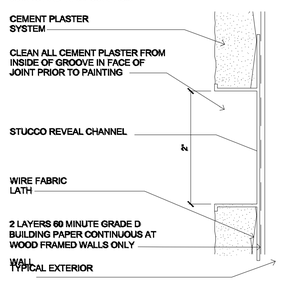

INSTALL ALL CEMENT PLASTER ACCESSORY PIECES PRIOR TO INSTALLATION OF WIRE FABRIC LATH TYP.

CAULK SPLICES AT ENDS BETWEEN REVEAL CHANNEL JOINTS AND WALL SURFACE.

10 REVEAL FULL SCALE

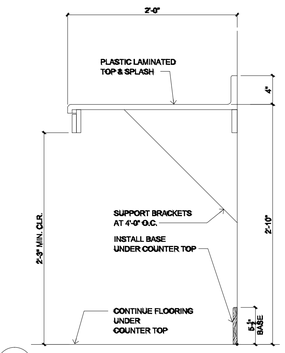

11 WORK COUNTER SCALE 1 1/2" = 1'-0"

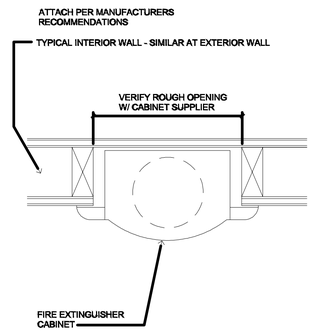

12 FIRE EXTINGUISHER CABINET SCALE 3" = 1'-0"

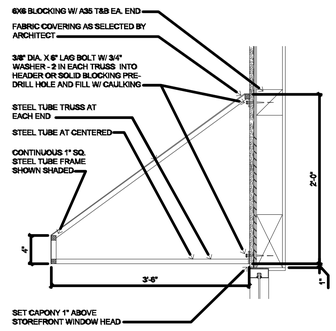

13 CANOPY SECTIOI I SCALE 1" = 1'-0"

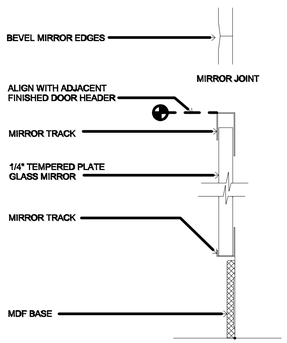

14 EXERCISE MIRROR FULL SCALE

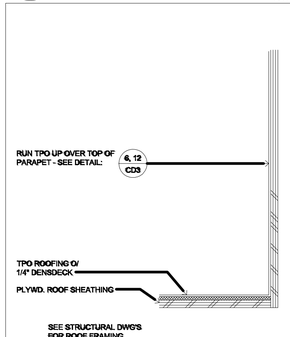

15 ROOF @ PARAPET SCALE 3" = 1'-0"

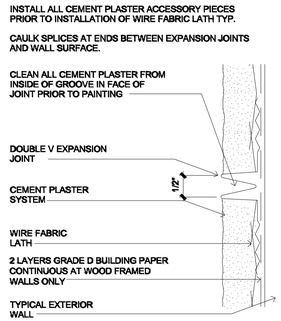

16 EXPANSION JOINT FULL SCALE

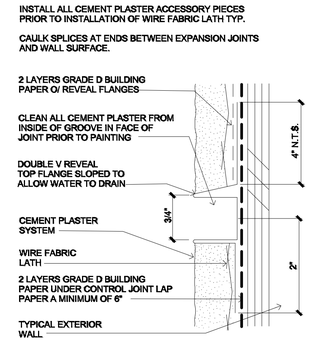

17 HORIZONTAL CONTROL JOINT FULL SCALE

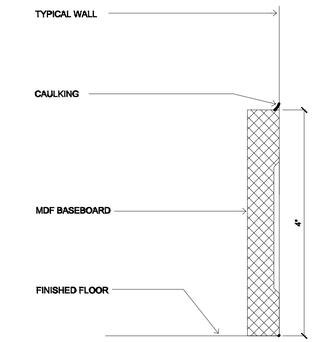

18 BASEBOARD FULL SCALE

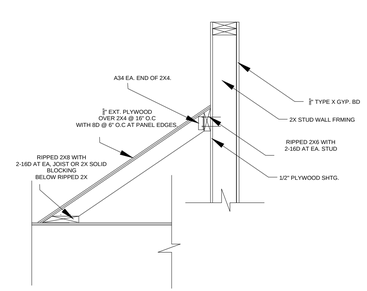

19 TYPICAL CRICKET DETAIL

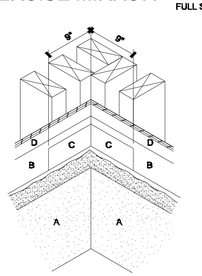

A. CEMENT PLASTER SYSTEM
B. 2 LAYERS GRADE D BUILDING PAPER - CAULK ALL HOLES IN PAPER PRIOR TO INSTALLATION OF CEMENT PLASTER
C. 1 LAYER OF POLYFLASH
D. SHEATHING WHERE OCCURS (TYP EXT WALL ASSEMBLY)

20 INSIDE CORNER NO SCALE

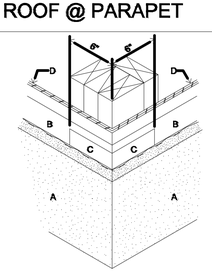

A. CEMENT PLASTER SYSTEM
B. 2 LAYERS GRADE D BUILDING PAPER-CAULK ALL HOLES IN PAPER PRIOR TO INSTALLATION ON CEMENT PLASTER
C. ADDITIONAL LAYER OF POLYFLASH BUILDING PAPER RUN VERTICAL AT CORNER
D. SHEATHING WHERE OCCURS (TYP EXT. WALL ASSEMBLY)

21 OUTSIDE CORNER NO SCALE

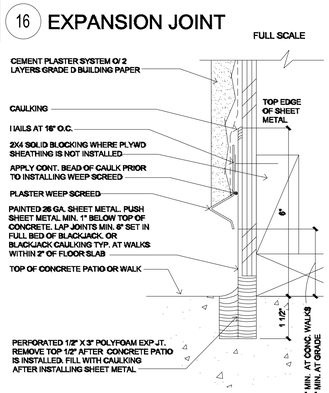

22 PATIO / WALK TO WALL SCALE 6" = 1'-0"

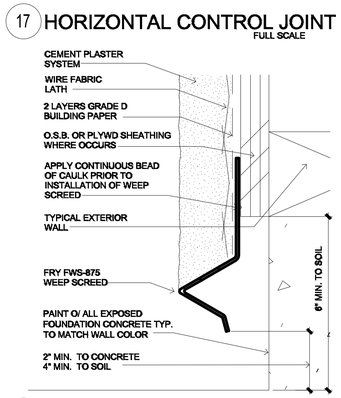

23 DRIP SCREED FULL SCALE

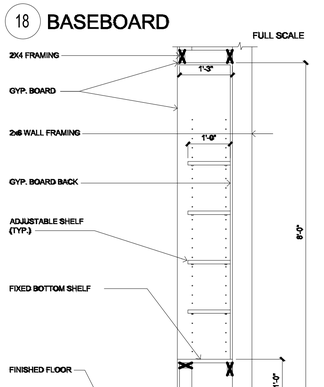

24 BUILT-IN SHELVING FULL SCALE SCALE 3/4" = 1'-0"

REVISIONS	BY
9/26/2011 – PLAN CHECK	G.O.

LICENSED ARCHITECT JOSEPH OAKLEY No. 15457 REN. 9-30-11 STATE OF CALIFORNIA

OAKLEY & OAKLEY
ARCHITECTURAL & STRUCTURAL ENGINEERS
OAKLAND, CA 94621
FAX 510 562 6043

PROJECT TITLE: COMMUNITY CENTER
HARBOR PARK APARTMENTS
969 PORTER STREET, VALLEJO, CA 94560

DRAWING TITLE: ARCHITECTURAL DETAILS

Date:	04/17/2012
Scale:	AS NOTED
Drawn:	STAFF
Checked:	RY
Job No.:	2011-09
Sheet:	A9.3
Of	Sheets

Jan 20, 2014 - 8:08am \\Server\server drive d\Year 2011 Jobs\2011-09.3 - Community Bldg\REVISED DRAWINGS FOR NEGOTIATED CONTRACT WITH WE LYONS\ARCHITECTRA9.3.dwg

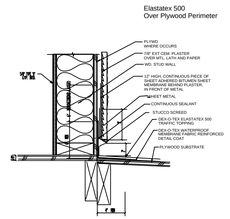

Deck To Wall 2 piece Flashing Detail E3A

Elastatex 500
Scupper Installation

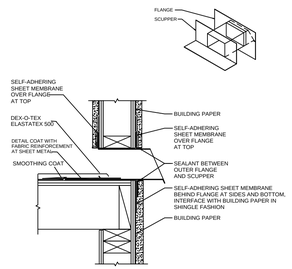

REFER TO THE FOLLOWING INSTALLATION
NOTES FOR ADDITIONAL REQUIRED INFORMATION

1. PLYWOOD SHEATHING AND FRAMING
2. CONCRETE SUBSTRATES
3A. SHEET METAL INSTALLATION - WOOD
3B. SHEET METAL INSTALLATION - CONCRETE

Elastatex 500 Scupper E4B
DEH351-001/01

ELASTATEX 500 Over Plywood
Cast Iron Flange Plate Drain

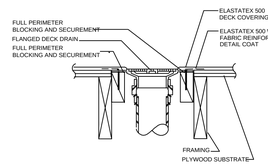

REFER TO THE FOLLOWING INSTALLATION
NOTES FOR ADDITIONAL REQUIRED INFORMATION

1. PLYWOOD SHEATHING AND FRAMING
5. DECK DRAIN REQUIREMENTS

Deck Drain Detail E4C
DUH351-001/01

Weatherwear
Rail Post

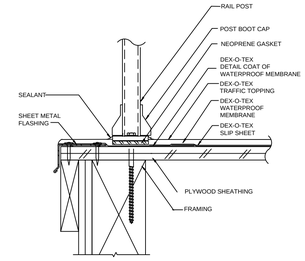

REFER TO THE FOLLOWING INSTALLATION
NOTES FOR ADDITIONAL REQUIRED INFORMATION

1. PLYWOOD SHEATHING AND FRAMING
7. RAILING INSTALLATION REQUIREMENTS

Railing Mounting Plate Detail W5C
DCH161-001/01

ELASTATEX 500
Rail Base

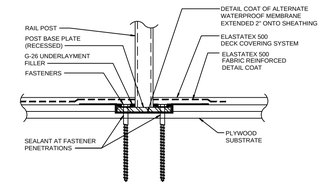

REFER TO THE FOLLOWING WEATHERWEAR INSTALLATION
NOTES FOR ADDITIONAL REQUIRED INFORMATION

1. PLYWOOD SHEATHING AND FRAMING
7. RAILING INSTALLATION REQUIREMENTS

Railing Mounting Plate Detail E5A

TYPICAL ARCHITECTURAL DETAILS AT DEXOTEX WALK DECK FINISH

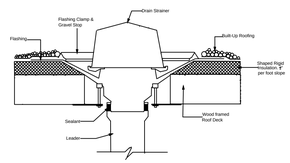

TYPICAL DETAIL AT Roof drain at sloped insulation board RD1

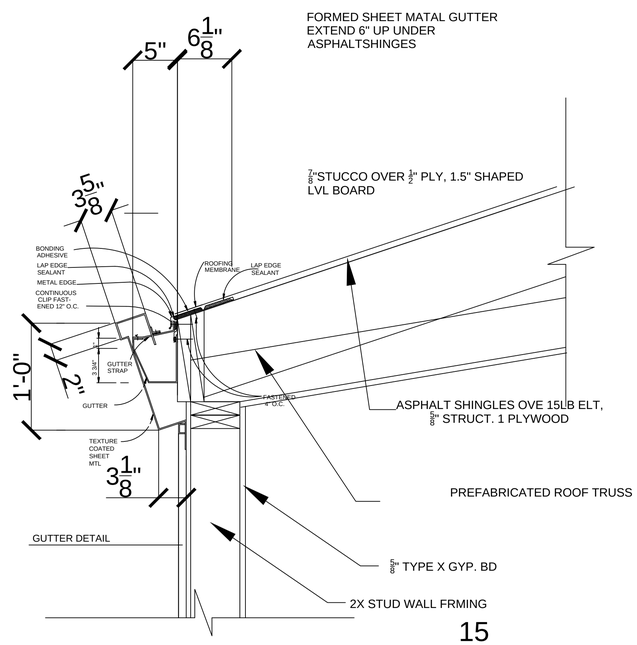

1 **ALTERNATE SHAPED GUTTER DETAIL**
(ONLY AT SLOPED ROOFS) SCALE : 1 1/2" = 1'

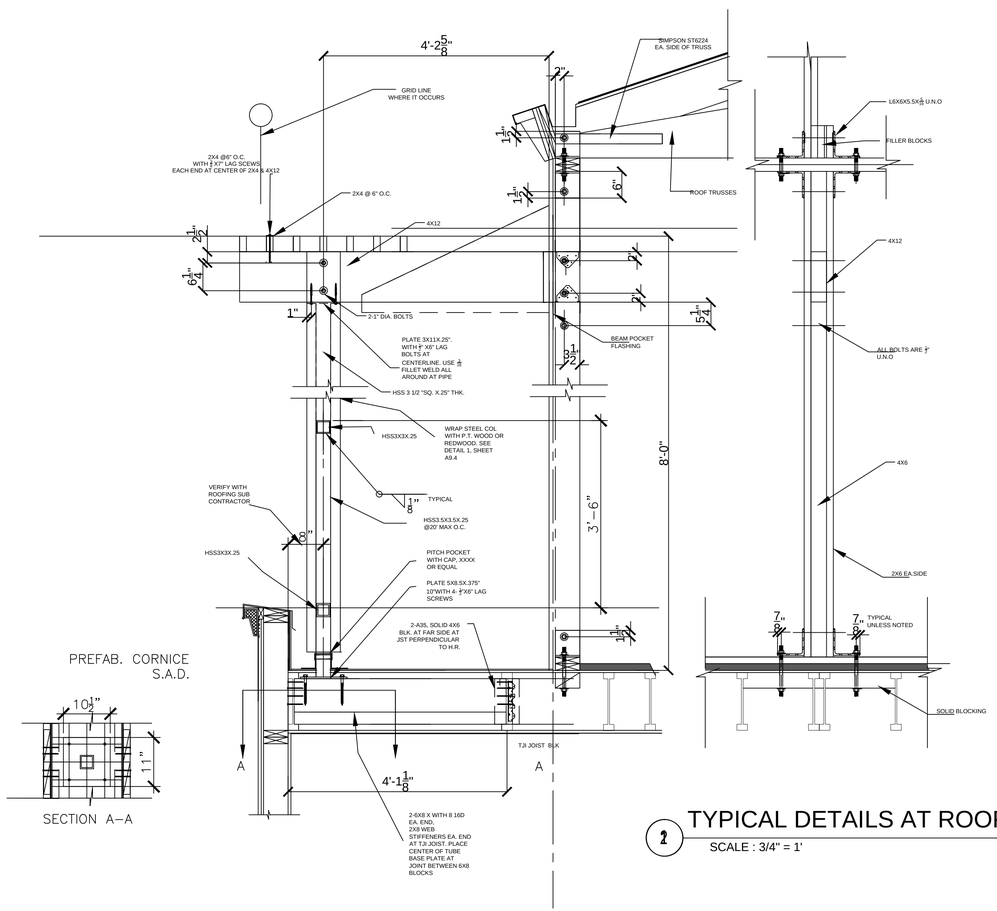

2 **TYPICAL DETAILS AT ROOF TRELLIS**
SCALE : 3/4" = 1'

REVISIONS	BY
9/26/2011 – PLAN CHECK	G.O.

LICENSED ARCHITECT
JOSEPH OAKLEY
No. 15457
REN. 9-30-11
STATE OF CALIFORNIA

OAKLEY & OAKLEY
ARCHITECTS/CIVIL & STRUCTURAL ENGINEERS
OAKLAND, CA 94621
FAX. 510 562 6043

PROJECT TITLE:
COMMUNITY CENTER
HARBOR PARK APARTMENTS
969 PORTER STREET, VALLEJO, CA 94560

DRAWING TITLE:
ARCHITECTURAL DETAILS

Date:	04/17/2012
Scale:	AS NOTED
Drawn:	STAFF
Checked:	RY
Job No.:	2011–09
Sheet:	A9.41
Of	Sheets

Jan 20, 2014 - 7:02am Z:\Year 2011 Jobs\2011-09.3 - Community Bldg\REVISED DRAWINGS FOR NEGOTIATED CONTRACT WITH WE LYONS\ARCHITECTURE\A9.41.dwg

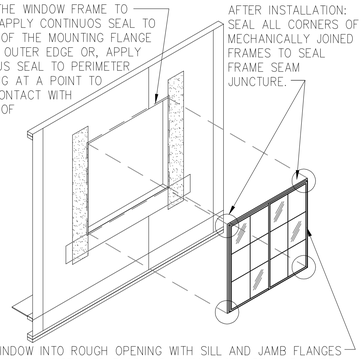

JAMB FLASHING 21
N.T.S.

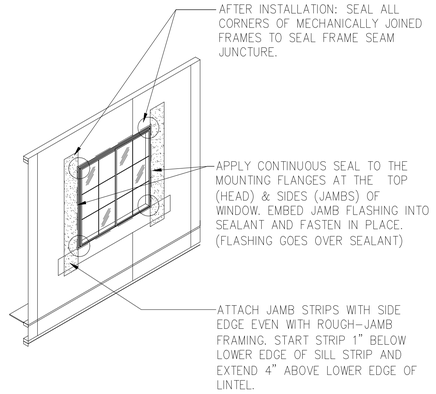

JAMB FLASH. 22
N.T.S.

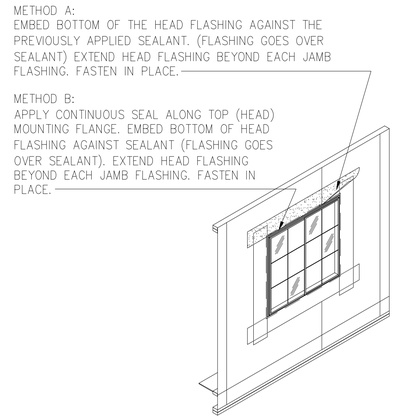

PRIM. WEATHER BARRIER 23
N.T.S.

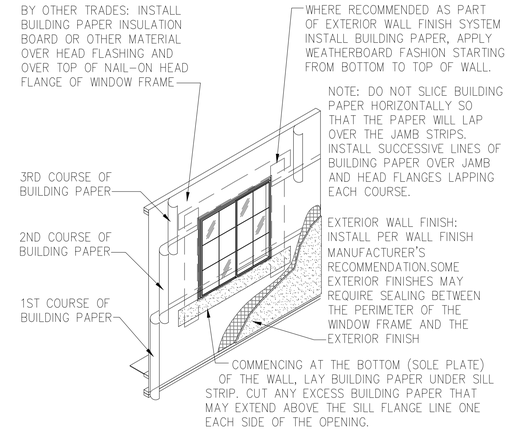

HEAD FLASHING 24
N.T.S.

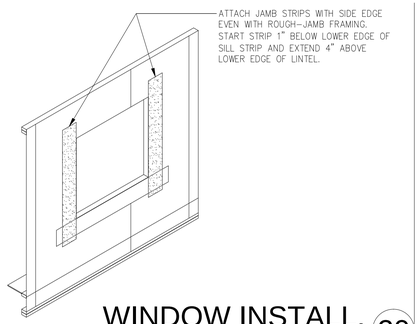

WINDOW INSTALL. 20
N.T.S.

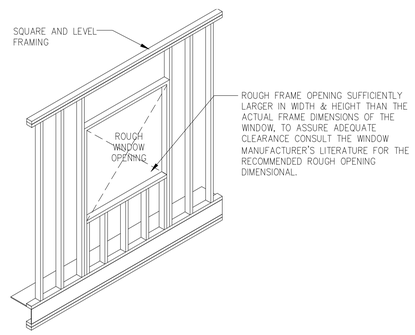

WINDOW INSTALL. 17
N.T.S.

WINDOW FLASHING NOTES:

LINE-WIRE, WHEN USED AS BACKING TO SUPPORT BUILDING PAPER BENEATH WIRE LATH (NETTING) FOR PORTLAND CEMENT PLASTER (STUCCO) SHALL BE INSTALLED AS FOLLOWS:

1. WIRE GAUGE, SPACING AND ATTACHMENT SHALL BE IN ACCORDANCE WITH THE REQUIREMENTS OF THE SPECIFICATIONS
2. PERIPHERAL FLASHING AT ALL EDGES OF WALL OPENINGS MUST COVER THE WIRE BACKING.
3. NO ATTACHMENT DEVICES NOR THE WIRE BACKING SHALL COVER OR PENETRATE THE FLASHING MATERIAL.

WINDOW FLASHING NOTES 25
N.T.S.

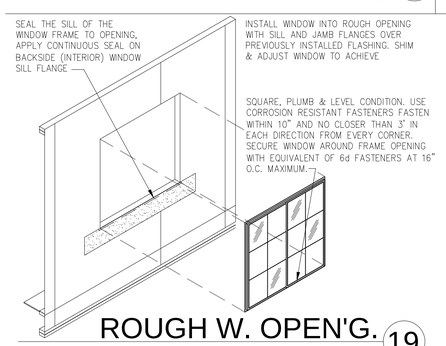

ROUGH W. OPEN'G. 19
N.T.S.

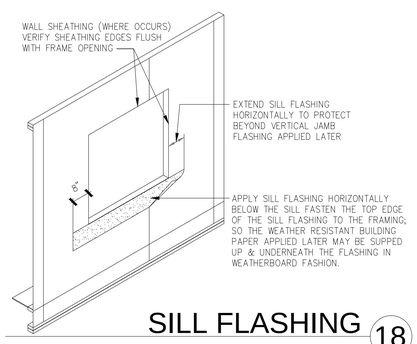

SILL FLASHING 18
N.T.S.

REVISIONS	BY
9/26/2011 - PLAN CHECK	G.O.

LICENSED ARCHITECT JOSEPH OAKLEY No. 15457 REN. 9-30-11 STATE OF CALIFORNIA

OAKLEY & OAKLEY
ARCHITECTURAL & STRUCTURAL ENGINEERS
1000 EDWARD AVE
OAKLAND, CA 94621
1555 GRAND AVE, STE. 615
SAN RAFAEL, CA 94901
510.562.6043
FAX 510.562.6043

PROJECT TITLE:
COMMUNITY CENTER
HARBOR PARK APARTMENTS
969 PORTER STREET, VALLEJO, CA 94560

DRAWING TITLE:
ARCHITECTURAL DETAILS

Date:	04/17/2012
Scale:	AS NOTED
Drawn:	STAFF
Checked:	RY
Job No.:	2011-09

Sheet:
A9.42
Of Sheets

Jan 21, 2014 - 5:33pm \\Server\server drive d\Year 2011 Jobs\2011-09.3 - Community Bldg\REVISED DRAWINGS FOR NEGOTIATED CONTRACT WITH WE LYONS\ARCHITECTRA9.42.dwg

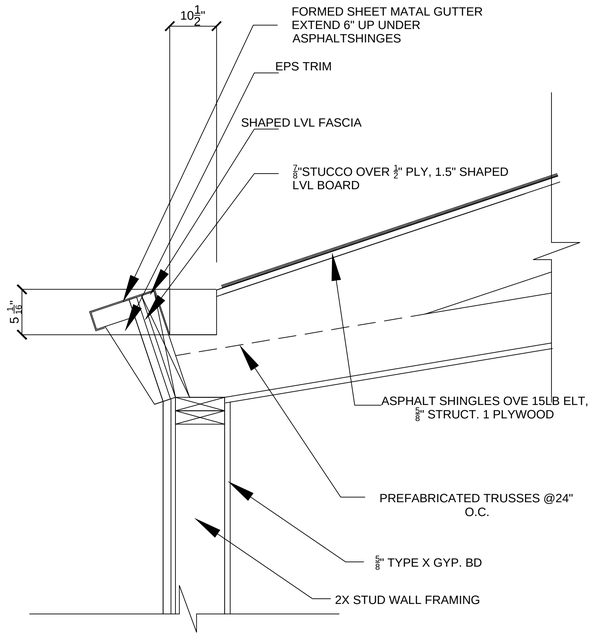

1 SHAPED GUTTER DETAIL
SCALE : 1 1/2" = 1'
SEE DETAIL 1/A9.41 FOR SHEET METAL ALTERNATE

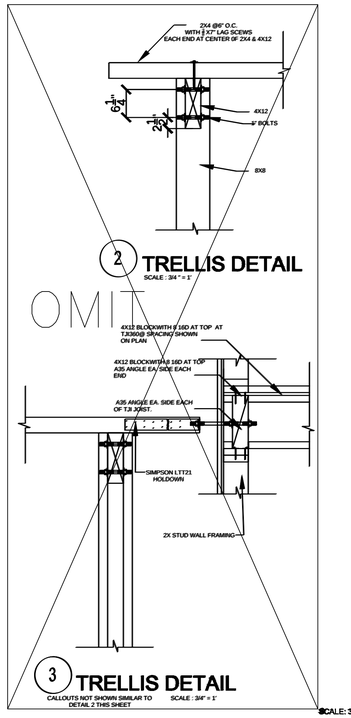

2 TRELLIS DETAIL
SCALE : 3/4" = 1'

3 TRELLIS DETAIL
CALLOUTS NOT SHOWN SIMILAR TO DETAIL 2 THIS SHEET
SCALE : 3/4" = 1'

SCALE: 3" = 1'-0"

1. USE 26 GAUGE (U.N.O.) BONDERIZED GALVANIZED SHEET METAL
2. SOLDER ALL SHEET METAL JOINTS IN SHOP FABRICATED COMPONENTS.
3. LAP SHEET METAL JOINTS 6" WITH SOLID BED OF SEALANT CONTINUOUS SANDWICHED BETWEEN SHEET METAL TYP.
4. VERIFY BY FIELD MEASUREMENT ALL DIMENSIONS PRIOR TO MANUFACTURER OF ANY SHEET METAL PIECES.
5. MACHINE BEND ALL CORNERS
6. CLEAN ALL SHEET METAL PRIOR TO INSTALLING WATERPROOF MEMBRANE
7. USE SIMILAR DETAILING ON SHEET METAL NOT SHOWN

4 SHEET METAL REQUIREMENTS
NO SCALE

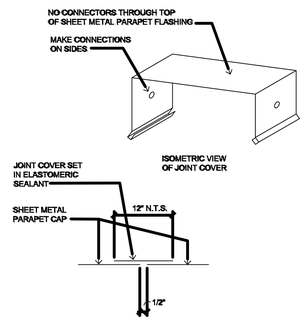

5 JOINT COVER
SCALE 3" = 1'-0"

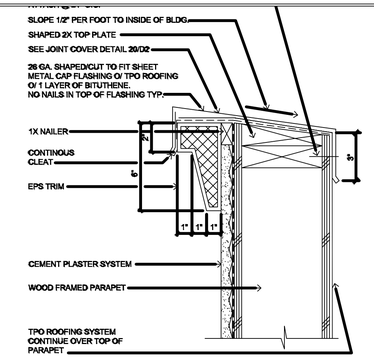

6 PARAPET
SCALE 3" = 1'-0"

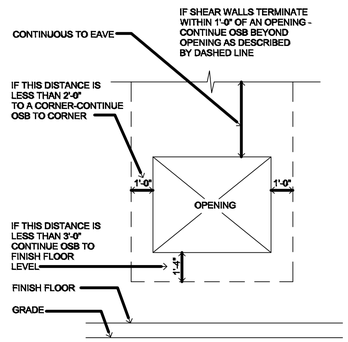

NOTE: PROVIDE OSB SHEATHING UNDER ALL LAP SIDING

10 OSB AROUND OPENINGS
NO SCALE

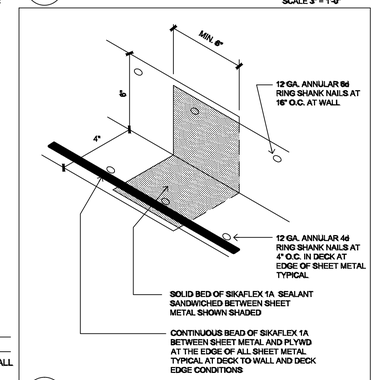

11 SHEET METAL OVERLAP
NO SCALE

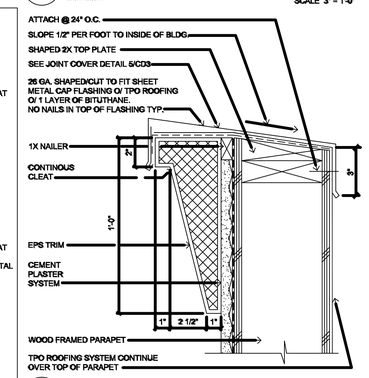

12 PARAPET
SCALE 3" = 1'-0"

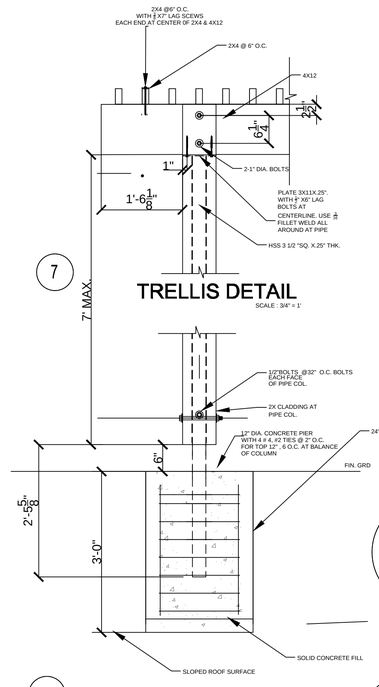

7 TRELLIS DETAIL
SCALE : 3/4" = 1'

13 TRELLIS DETAIL
COLUMN FOOTING AT SLOPED ROOF
SCALE: 3/4" = 1'-0"

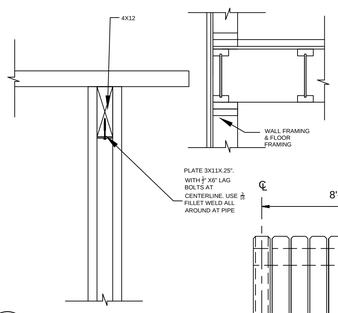

8 TRELLIS DETAIL
CALLOUTS NOT SHOWN SIMILAR TO DETAIL 2 & 3 THIS SHEET
SCALE : 3/4" = 1'

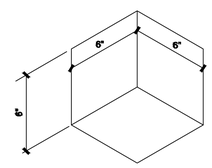

16 INSIDE CORNER SHEET METAL
SCALE: 1-1/2" = 1'-0"

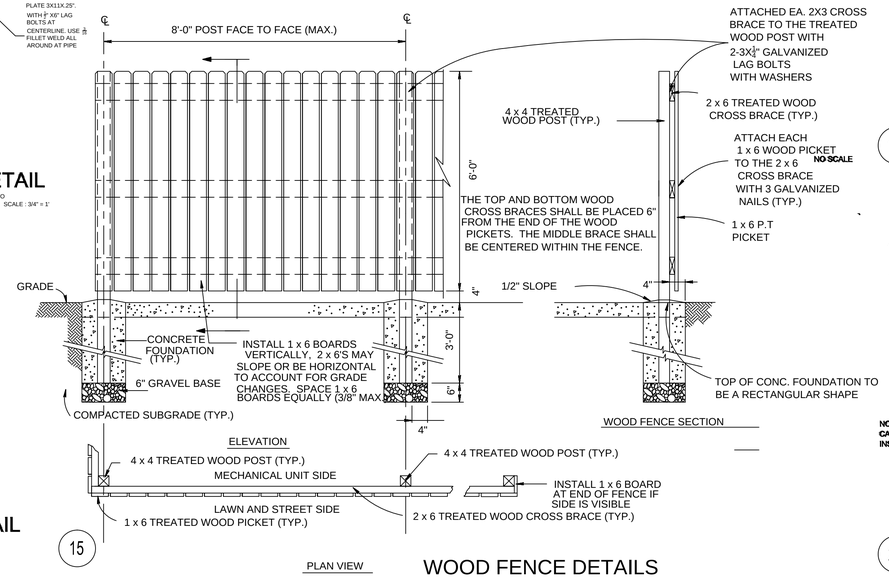

15 WOOD FENCE DETAILS

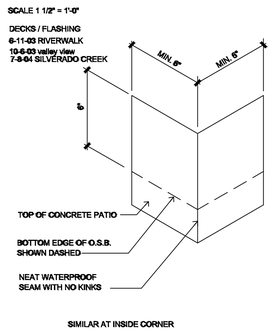

17 OUTSIDE CORNER SHEET METAL AT CONCRETE PATIOS
NO SCALE

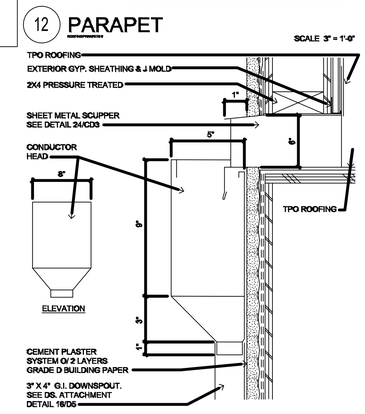

18 SCUPPER @ PARAPET
SCALE 3" = 1'-0"

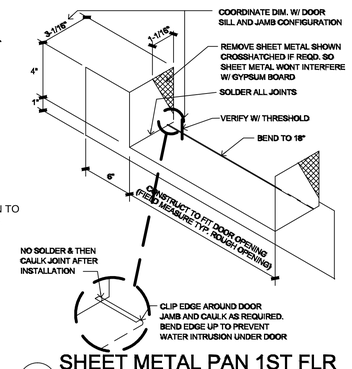

23 SHEET METAL PAN 1ST FLR EXTERIOR DOORS (SLIDING OR SWINGING)
NO SCALE

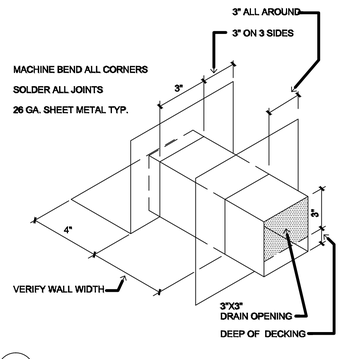

27 SHEET METAL SCUPPER
NO SCALE

REVISIONS	BY
9/26/2011 – PLAN CHECK	G.O.

LICENSED ARCHITECT JOSEPH OAKLEY No. 15457 REN. 9-30-11 STATE OF CALIFORNIA

OAKLEY & OAKLEY
ARCHITECT, CIVIL & STRUCTURAL ENGINEERS
7700 LANDEWATER DRIVE, STE. 615
OAKLAND, CA 94621
510.562.6028
FAX 510.562.6043

PROJECT TITLE: COMMUNITY CENTER
HARBOR PARK APARTMENTS
969 PORTER STREET, VALLEJO, CA 94560

DRAWING TITLE: ARCHITECTURAL DETAILS

Date:	04/17/2012
Scale:	AS NOTED
Drawn:	STAFF
Checked:	RY
Job No.:	2011-09
Sheet:	A9.4
Of	Sheets

Jan 20, 2014 - 7:25am Z:\Year 2011 Jobs\2011-09.3 - Community Bldg\REVISED DRAWINGS FOR NEGOTIATED CONTRACT WITH WE LYONS\ARCHITECTRURE\A9.4REV.dwg

ELEVATION NOTES

1. THE HIGHEST OPERABLE PART ON ALL DISPENSER SHALL BE NO MORE THAN 40" ABOVE FINISH FLOOR

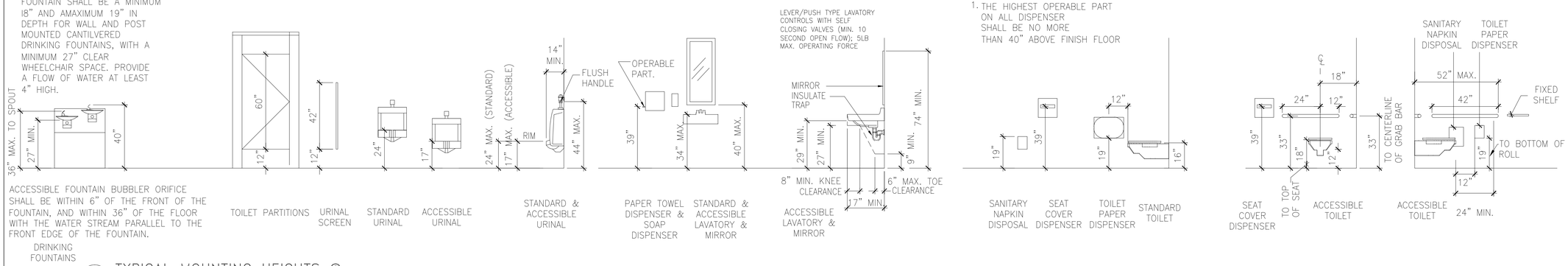

1 TYPICAL MOUNTING HEIGHTS @ RESTROOMS & PLUMBING FIXT.

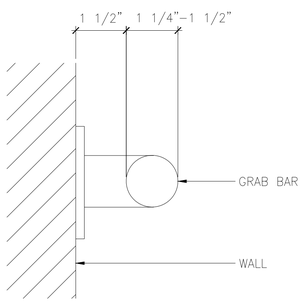

2 GRAB BAR DETAIL 6" = 1'-0"

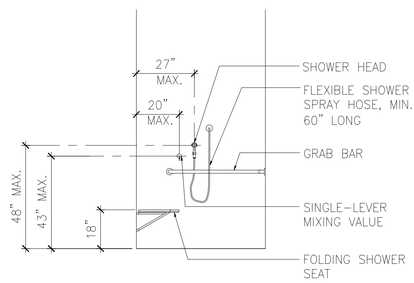

10 FIXTURE MOUNTING HEIGHT @ SHOWER STALL 3/8"=

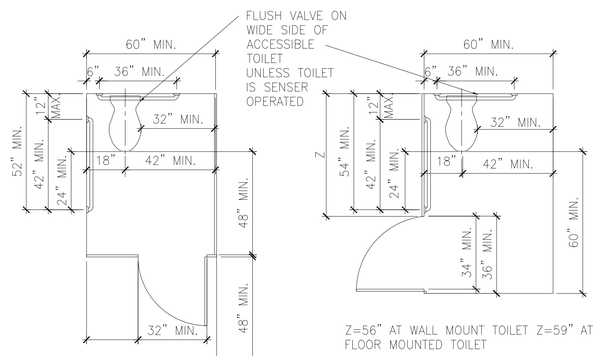

6 CLEARANCES @ ACCESSIBLE TOILET STALL 3/8"=1'-0"

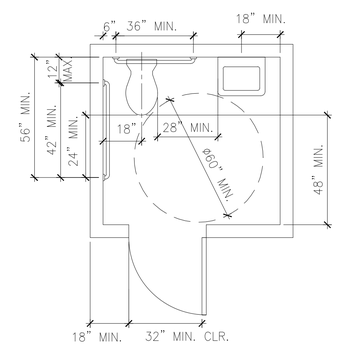

2 CLEARANCES @ ACCESSIBLE SINGLE ACCOMMODATION TOILET 3/8"=1'-0"

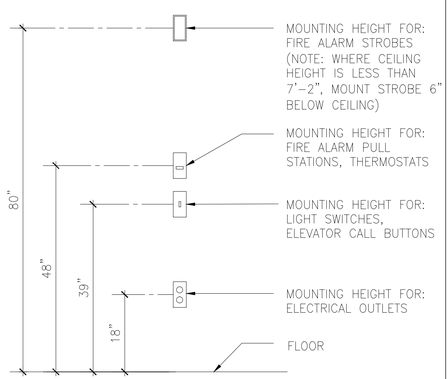

16 MOUNTING HEIGHTS FOR ELECTRICAL ITEMS 3/4"=1'-0"

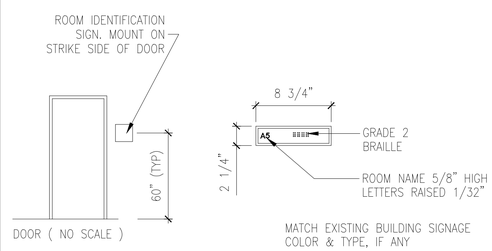

11 TYPICAL ROOM SIGNAGE 1 1/2" = 1'-0" (U.O.N.)

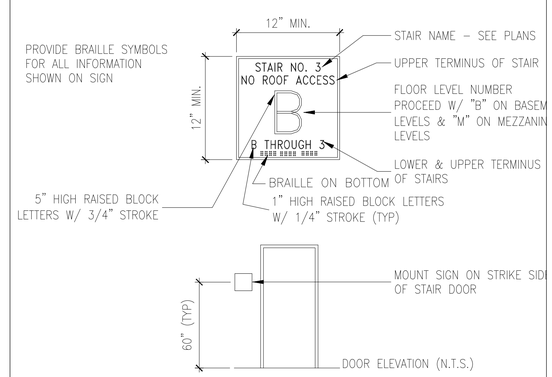

7 STAIR SIGNAGE 1 1/2" = 1'-0" (U.O.N.)

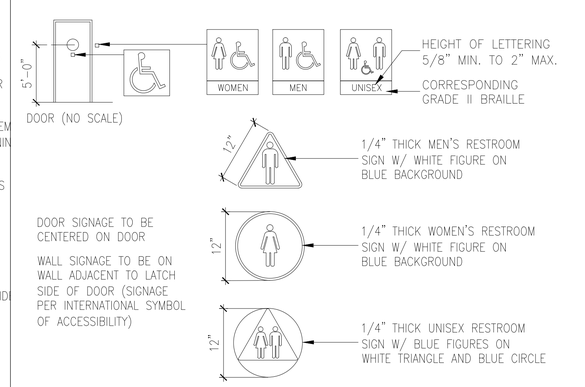

3 RESTROOM SIGNAGE 1 1/2" = 1'-0" (U.O.N.)

REVISIONS	BY
9/26/2011 - PLAN CHECK	G.O.

LICENSED ARCHITECT JOSEPH OAKLEY No. 15457 REN. 9-30-11 STATE OF CALIFORNIA

OAKLEY & OAKLEY
ARCHITECTURAL & STRUCTURAL ENGINEERS
1010 WALL STREET, STE. 615
OAKLAND, CA 94607
PH 510 562 8621
FAX 510 562 6043

PROJECT TITLE: COMMUNITY CENTER
HARBOR PARK APARTMENTS
969 PORTER STREET, VALLEJO, CA 94560

DRAWING TITLE: ADA REQUIREMENTS

Date:	04/17/2012
Scale:	AS NOTED
Drawn:	STAFF
Checked:	RY
Job No.:	2011-09
Sheet:	A9.5
Of	Sheets

Jan 20, 2014 - 8:10am \\Server\server drive a\Year 2011 Jobs\2011-093 - Community Bldg\REVISED DRAWINGS FOR NEGOTIATED CONTRACT WITH WE LYONS\ARCHITECTRA95.dwg

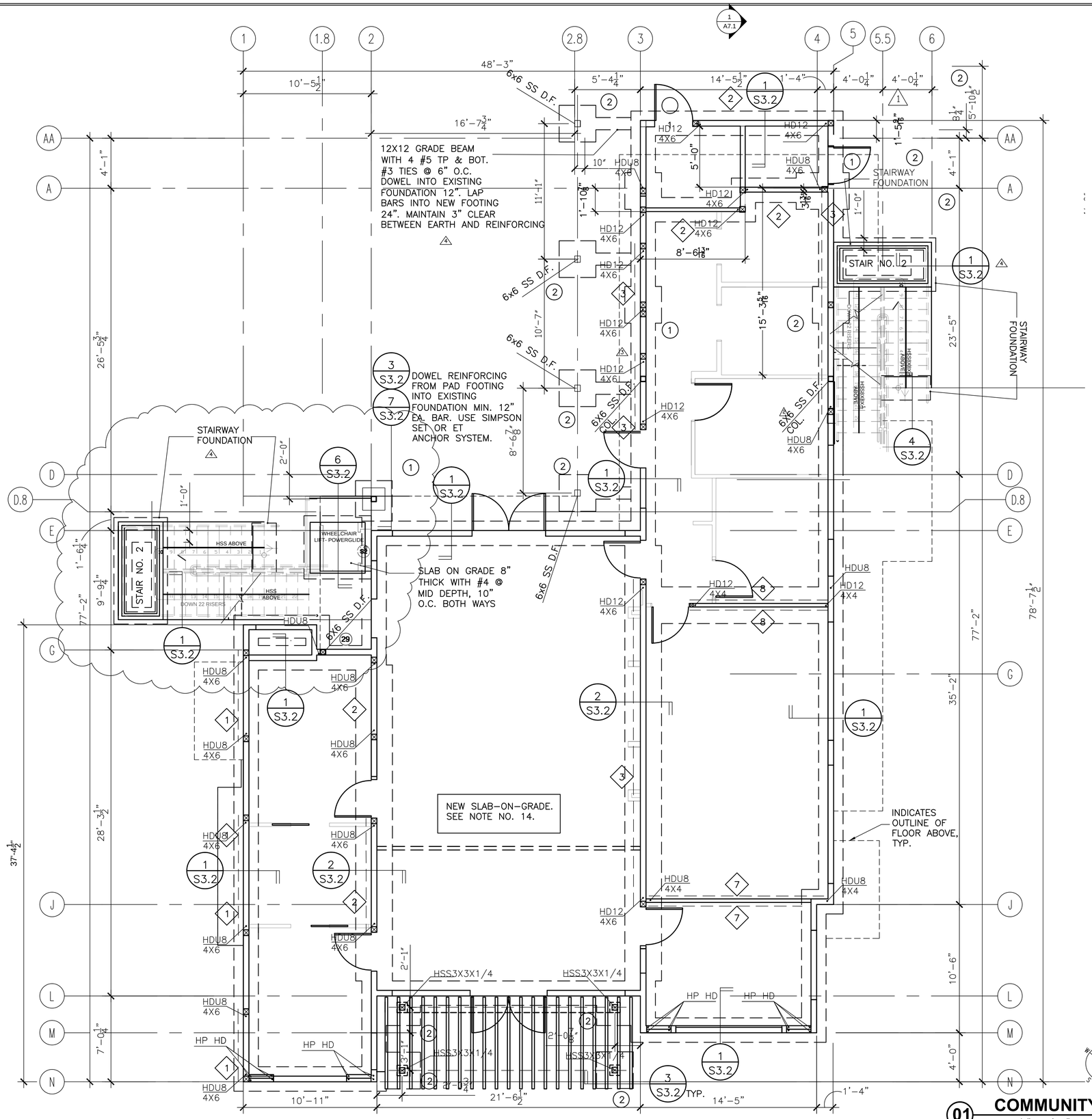

FOUNDATION NOTES

1. SEE GENERAL NOTES ON SHEET S0.1..
2. FOUNDATION PLAN IS TAKEN ABOVE SLAB ON GRADE.
3. SEE TYPICAL CONCRETE AND WOOD FRAMED STUD WALL DETAILS ON SHEET S3.1, S6.1 AND S6.2.
4. SEE ARCHITECTURAL DWGS. FOR TOP OF SLAB ELEVATIONS.
5. EXCAVATIONS SHALL BE MADE AS NEAR AS POSSIBLE TO THE NEAT LINES REQUIRED BY THE SIZE AND SHAPE OF THE STRUCTURE. NO MATERIAL IS TO BE EXCAVATED UNNECESSARILY.
6. ALL FOUNDATION EXCAVATIONS MUST BE REVIEWED AND APPROVED BY THE SOILS ENGINEER PRIOR TO PLACEMENT OF CONCRETE.
7. VERIFY LOCATION OF UNDERGROUND UTILITIES BEFORE EXCAVATION. NOTIFY ARCHITECT PRIOR TO EXCAVATION IN THE EVENT SUCH UTILITIES ARE ENCOUNTERED.
8. SLAB CONSTRUCTION AND CONTROL JOINT LOCATIONS SHALL BE APPROVED BY THE ARCHITECT PRIOR TO PLACING ANY CONCRETE.
9. NEW STRUCTURAL BEARING WOOD WALLS ARE SHOWN THUS: ON PLAN AND SHALL BE 2x6 STUDS @ 16" O.C. U.O.N. SEE ARCHITECTURAL DRAWINGS FOR NON-LOAD BEARING PARTITIONS. USE 3X STUDS AT PANEL JOINTS AT ALL SHEAR WALLS
10. SILL BOLTS AND/OR SHOT PINS ARE REQUIRED AT ALL STUD WALLS SHOWN ON STRUCTURAL PLANS. SEE DETAILS ON SHEETS S3.1.
11. WHERE NOTED ON PLAN AS "HP HD" INDICATES HARDY PANEL HOLDOWN. PROVIDE HARDY PANEL GROUND FLOOR HOLDOWN SHEET S3.21 & PER THE MANUFACTURES STANDARD DETAILS 2B/S8, 29B,S9.
12. SEE DETAIL 23/S3.1 FOR EQUIPMENT PAD DETAIL AND REINFORCEMENT. SEE ARCHITECTURAL DRAWINGS FOR PAD LOCATIONS
13. (X) – DENOTES PAD FOOTING. SEE SCHEDULE ON SHEET S3.1.
14. NEW SLAB-ON-GRADE SHALL BE 5" THICK w/ #4 BARS AT 12" O.C., EA WAY, o/ 2" OF SAND o/ A 12 MILL VAPOR BARRIER o/ A MIN. OF 4" OF FREE DRAINING GRAVEL
15. FOR STAIR 1 AND STAIR 2 FRAMING PLANS AND ELEVATIONS, SEE SHEET S5.1.
16. GROUND FLOOR HOLDOWN TIES ARE REQUIRED AT EACH END OF SHEAR WALL AND AT LOCATIONS NOTED THUS: HD1 . ALL HOLDOWNS TO BE ON 6x6 POST U.N.O. SEE DETAILS ON SHEET S3.1, AND S6.1 AND S6.2

01 COMMUNITY CENTER FOUNDATION PLAN

SCALE: 1/4" = 1'-0"

REVISIONS	BY
1 9/26/2011 – PLAN CHECK	G.O.
2 4/24/2013 ELECT. ROOM	J.O.
3 FOUNDATION FOR REAR OF BUILDING	J.O.
4 FOUNDATION FOR POSTS & STAIRWAY	J.O.

REGISTERED PROFESSIONAL ENGINEER JOSEPH OAKLEY JR. No. 2000 Exp. 09/30/15 STRUCTURAL STATE OF CALIFORNIA

OAKLEY & OAKLEY
ARCHITECT, CIVIL & STRUCTURAL ENGINEERS
7700 EDGEWATER DRIVE, STE. 615
OAKLAND, CA 94621
510.562.6028 FAX 510.562.6043

PROJECT TITLE: COMMUNITY CENTER
HARBOR PARK APARTMENTS
969 PORTER STREET, VALLEJO, CA 94560

DRAWING TITLE: **FOUNDATION PLAN**

Date:	04/24/2013
Scale:	AS NOTED
Drawn:	STAFF
Checked:	RY
Job No.:	2011-09
Sheet:	S1.1
Of	Sheets

Jan 27, 2014 - 8:14pm \\SERVER\Server Drive D\Year 2011 Jobs\2011-09.3 - Community Bldg\REVISED DRAWINGS FOR NEGOTIATED CONTRACT WITH WE LYONS\STRUCTURAL\S1(CURRENT 6-01-2013 - Foundation Plan_082012.dwg

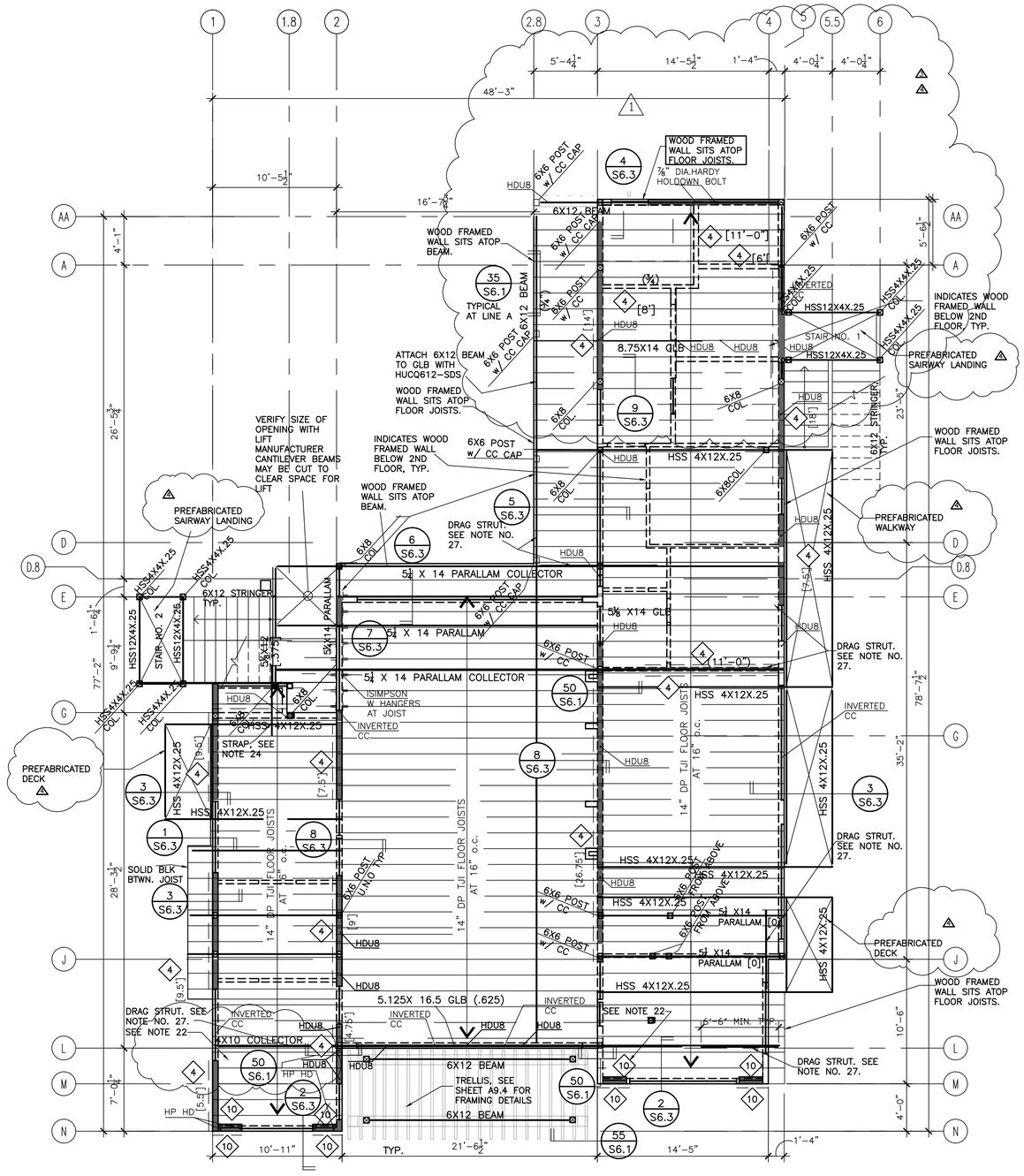

01 COMMUNITY CENTER 2ND FLOOR FRAMING PLAN

SCALE: 3/16" = 1'-0" NOTE ALL PLYWOOD EDGES SHALL BE BLOCKED AT WALL, ROOF AND FLOOR SHEATHING EXCEPT ROOF ABOVE THIRD FLOOR

2ND FLOOR FRAMING NOTES

1. SEE GENERAL NOTES ON SHEET S0.1.
2. SEE TYPICAL WOOD DETAILS ON SHEET S6.1 AND S6.2.
3. SEE ARCHITECHTURAL DRAWINGS FOR FINISHED FLOOR ELEVATIONS.
4. MARKS "TJI" ETC. INDICATE WOOD TRUSS JOIST.
5. NEW STRUCTURAL WOOD WALLS ARE SHOWN THUS: OR THUS: ON PLAN AND SHALL BE AS FOLLOWS:
   2X6 AT 16" o.c. FROM GROUND/FDN TO 2ND FLOOR
   2X6 AT 16" o.c. FROM 2ND FLOOR TO THE ROOF.
   USE 3X STUDS ALL ALL WOOD FRAMED SHEAR WALLS.
   SEE ARCHITECTURAL DRAWINGS FOR NON-LOAD BEARING PARTITIONS.
6. DENOTES (N) 15/32" THK. STRUCTURAL I PLYWOOD SHEAR WALL. AS REQUIRED. PLYWOOD EXTENDS FULL HEIGHT OF THE WALL. SEE DETAILS AND SCHEDULE ON SHEET S1-04.
7. FLOOR TO FLOOR HOLDOWN TIES ARE REQUIRED AT EACH END OF SHEAR WALL AND AT LOCATIONS NOTED THUS: HD1 . ALL HOLDOWNS TO BE ON 6x6 POST U.N.O. SEE DETAILS ON SHEET S3.1, AND S6.1 AND S6.2
8. WHERE METAL FRAMING CONNECTORS ARE REQUIRED, "SIMPSON" CONNECTORS ARE DENOTED.
9. ON PLAN INDICATES 6X6 POST U.N.O.
10. SEE 43/S6.1 FOR HEADER SIZES NOT CALLED OUT ON PLAN
11. SEE ARCH. DWGS. FOR SLOPES OF ROOFS/EXTERIOR DECKS.
12. ALL GLULAM BEAMS 24F-V4
13. [X] INDICATES CAMBER IN GLULAM BEAMS
14. SEE ARCH. DWGS. FOR EXACT LOCATION OF WINDOWS & DOORS.
15. ALL FLOOR JOIST ARE 14" DEEP U.N.O. WITH 1½" LIGHTWEIGHT CONCRETE TOPPING OVER ¾" CDX PLYWOOD.
16. AT SHEAR WALL TYPE 9 AND 10 PROVIDE HARDY PANEL PER THE WIDTHS INDICATED ON THE SHEAR WALL SCHEDULE SHOWN ON SHEET S6.2. PROVIDE ASSOCIATED HOLDOWNS, SILL ANCHORAGE AND SHEAR TRANSFER DETAILS PER THE MANUFACTURES STANDARD DETAILS.
17. WHERE NOTED ON PLAN AS "HP HD" INDICATES HARDY PANEL HOLDOWN. PROVIDE HARDY PANEL FLOOR TO FLOOR HOLDOWN PER THE MANUFACTURES STANDARD DETAILS.
18. WHERE NOTED ON PLAN AS "HP HD*" INDICATES HARDY PANEL HOLDOWN THAT RESTS ATOP A BEAM. PROVIDE HARDY PANEL FLOOR TO BEAM HOLDOWN PER THE MANUFACTURES STANDARD DETAILS.
19. NOT USED.
20. ALL TJI'S ARE TJI/360, TYP. U.N.O..
21. 6X6 POST FROM ABOVE
22. PROVIDE BLOCKING @ 4'-0" O.C. IN-BETWEEN JOISTS BLOCK ALL PLYWOOD EDGES
23. DOUBLE JOIST UNDER ALL PARALLEL PARTITIONS.
24. 10' LONG CMST12 STRAP. CENTER STRAP AT END OF BEAM AND PROVIDE FULL BLOCKING AT FLOOR JOIST
25. NOT USED.
26. FOR STAIR 1 AND STAIR 2 FRAMING PLANS AND ELEVATIONS, SEE SHEET S5.1.
27. INDICATES DRAG STRUT/CHORD USING CMST12 CONT. STRAP. SEE 10B/S6.3 FOR CONNECTION INFO. EXTEND STRAP ACROSS\ ENTIRE DIAPHRAGM U.N.O.

PLAN NORTH

REVISIONS	BY
9/26/2011 - PLAN CHECK	G.O.
2/3/2012 - 3RD STRY	RT.JO
ADDED NOTE FOR POST FROM ABOVE, AND SUPORT	BEAMS
ENLARGED ELECTRIC ROOM	
ADDED PREFABRICATED STAIRS AND BALCONY	
REVISED FLOOR FRAMING BIDDING	

REGISTERED PROFESSIONAL ENGINEER JOSEPH OAKLEY JR. No. 2000 Exp. 09/30/11 STRUCTURAL STATE OF CALIFORNIA

OAKLEY & OAKLEY
ARCHITECT, CIVIL & STRUCTURAL ENGINEERS
7700 EDWARDS AVENUE
HARBOR PARK, RIVERSIDE 615
510-562-6028
FAX 510-562-6043

PROJECT TITLE: COMMUNITY CENTER
HARBOR PARK APARTMENTS
969 PORTER STREET, VALLEJO, CA 94560

DRAWING TITLE: 2ND FLOOR FRAMING PLAN

Date:	08/30/2011
Scale:	AS NOTED
Drawn:	STAFF
Checked:	RY
Job No.:	2011-09
Sheet:	S1.2
Of	Sheets

Jan 27, 2014 - 8:44pm \\SERVER\Server Drive D\Year 2011 Jobs\2011-09.3 - Community Bldg\REVISED DRAWINGS FOR NEGOTIATED CONTRACT WITH WE LYONS\STRUCTURAL\S1.2 -CURRENT 6-01-2013 2nd Floor Frmg Plan_082012.dwg

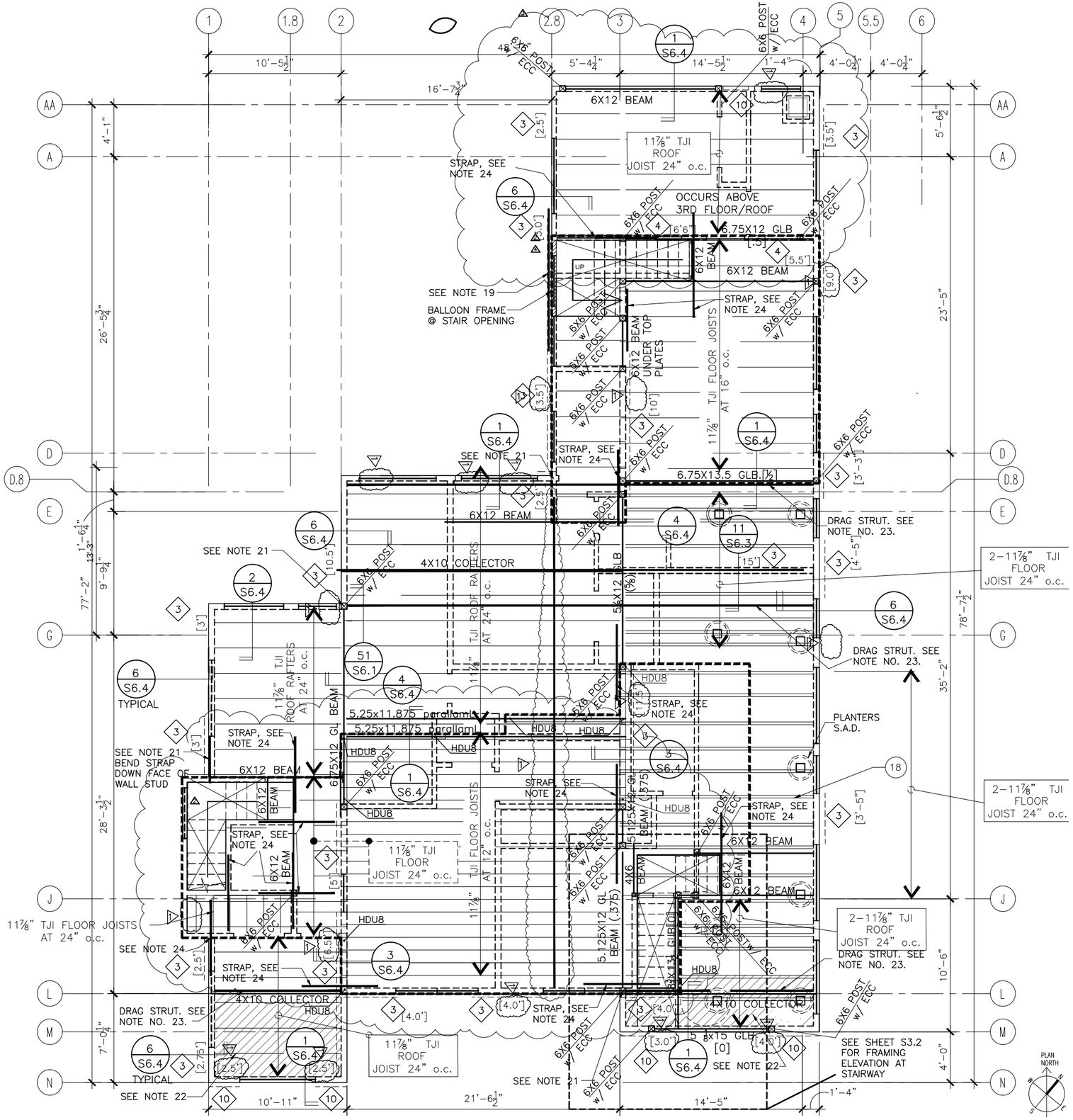

01 COMMUNITY CENTER THIRD FLOOR & SECOND FLOOR ROOF FRAMING PLAN

SCALE: ¼" = 1'-0"

ROOF FRAMING NOTES FOR SHEET S1.3

1. SEE GENERAL NOTES ON SHEET S0.1.
2. SEE TYPICAL WOOD DETAILS ON SHEETS S6.1 AND S6.3.
3. WHERE NOTED ON PLAN, PROVIDE 2x12 TAPERED TO 2x10 AT 24" O.C. SEE ARCH
4. STRUCTURAL WOOD WALLS SUPPORTING THE ROOF ARE SHOWN THUS: OR THUS: WHERE PARAPET OCCURS. SEE ARCHITECTURAL DRAWINGS FOR NON-LOAD BEARING PARTITIONS.
5. WHERE NEW METAL FRAMING CONNECTORS ARE REQUIRED, "SIMPSON" CONNECTORS ARE DENOTED.
6. NOT USED.
7. SEE 4.3/S6.2 FOR HEADER SIZES NOT CALLED OUT ON PLAN
8. SEE ARCH. DWGS. FOR SLOPES OF ROOFS.
9. ALL GLULAM BEAMS 24F-V4
10. [X] INDICATES CAMBER IN GLULAM BEAMS
11. SEE ARCH. DWGS. FOR EXACT LOCATION OF WINDOWS AND DOORS.
12. INDICATES NEW SHEAR WALL. SEE SCHEDULE ON SHEET S6.2.
13. ALL NEW WOOD FRAMED BEARING WALLS ARE 2x6 @ 16" O.C. TYP. U.N.O. USE 3x6 STUDS AT SHEAR WALLS
14. AT SHEAR WALL TYPE 9 AND 10, PROVIDE HARDY PANEL PER THE WIDTHS INDICATED ON THE SHEAR WALL SCHEDULE SHOWN ON SHEET S6.2. PROVIDE ASSOCIATED HOLDOWNS, SILL ANCHORAGE AND SHEAR TRANSFER DETAILS PER THE MANUFACTURES STANDARDS.
15. NOT USED.
16. ALL TJI'S ARE TJI/HS90, TYP U.N.O.
17. WHERE NOTED ON PLAN PROVIDE 11 7/8" 360 TJI JOIST AT 24" o.c..
18. ROOF & FLOOR SHEATHING IS 3/4" CDX STRUCTURAL 1 PLYWOOD w/ 10d NAILS AT 4" o.c., PROVIDE BLOCKING.
19. CONTINUOUS CMST12 STRAP. OVERLAP 3'-6" @ EACH END PROVIDE BLOCKING @ BALLOON FRAMING AND ATTACH TO ROOF TOP PLATES
20. U.N.O. TOP PLATE SPLICES ALONG GRIDLINES THAT ARE SHEARWALLS SHALL BE MST48
21. USE 8'-0" LONG CMST12 BOTH WAYS, CENTER ON CORNER BLOCK FLOOR JOISTS AS REQUIRED
22. PROVIDE BLOCKING @ 4'-0" O.C. IN-BETWEEN JOISTS
23. INDICATES DRAG STRUT/CHORD USING CMST12 CONT. STRAP. SEE 10B/S6.3 FOR CONNECTION INFO.
24. 5' LONG CMST12 STRAP. CENTER STRAP AT END OF BEAM AND PROVIDE FULL BLOCKING AT FLOOR JOIST
25. WHERE NOTED ON PLAN INDICATES EXTENT OR TAPERED INSULATION. SEE ARCHITECTURAL DRAWING FOR ADDITIONAL INFORMATION
26. FOR STAIR 1 AND STAIR 2 FRAMING PLANS AND ELEVATIONS, SEE SHEET S5.2
27. ---------- ON PLAN INDICATES AREA OF ROOF WITH RAISED SLEEPERS TO LEVEL FLOOR FOR THIRD STORY

REVISIONS	BY
9/26/2011 - PLAN CHECK	G.O.
2/3/2012 - 3RD STRY	RT.JO
5/22/ENLARGED ELECT. ROOM	RT.JO
1/ 08 /14 REVISED FRAMING FOR BIDDING	

REGISTERED PROFESSIONAL ENGINEER JOSEPH OAKLEY JR. No. 2000 Exp. 09/30/11 STRUCTURAL STATE OF CALIFORNIA

OAKLEY & OAKLEY
ARCHITECT, CIVIL & STRUCTURAL ENGINEERS
2 ARANDA WAY
OAKLAND, CA 94621
510.562.6028
FAX 510.562.6043

PROJECT TITLE: COMMUNITY CENTER
HARBOR PARK APARTMENTS
969 PORTER STREET, VALLEJO, CA 94560

DRAWING TITLE: ROOF FRAMING PLAN

Date:	08/30/2011
Scale:	AS NOTED
Drawn:	STAFF
Checked:	RY
Job No.:	2011-09
Sheet:	S1.3
Of	Sheets

Jan 27, 2014 - 8:51pm \\SERVER\Server Drive D\Year 2011 Jobs\2011-09.3 - Community Bldg\REVISED DRAWINGS FOR NEGOTIATED CONTRACT WITH WE LYONS\STRUCTURAL\S1.3 CURRENT 5-22-2013-second Floor Roof-Third Floor Frmg Plan (2).dwg

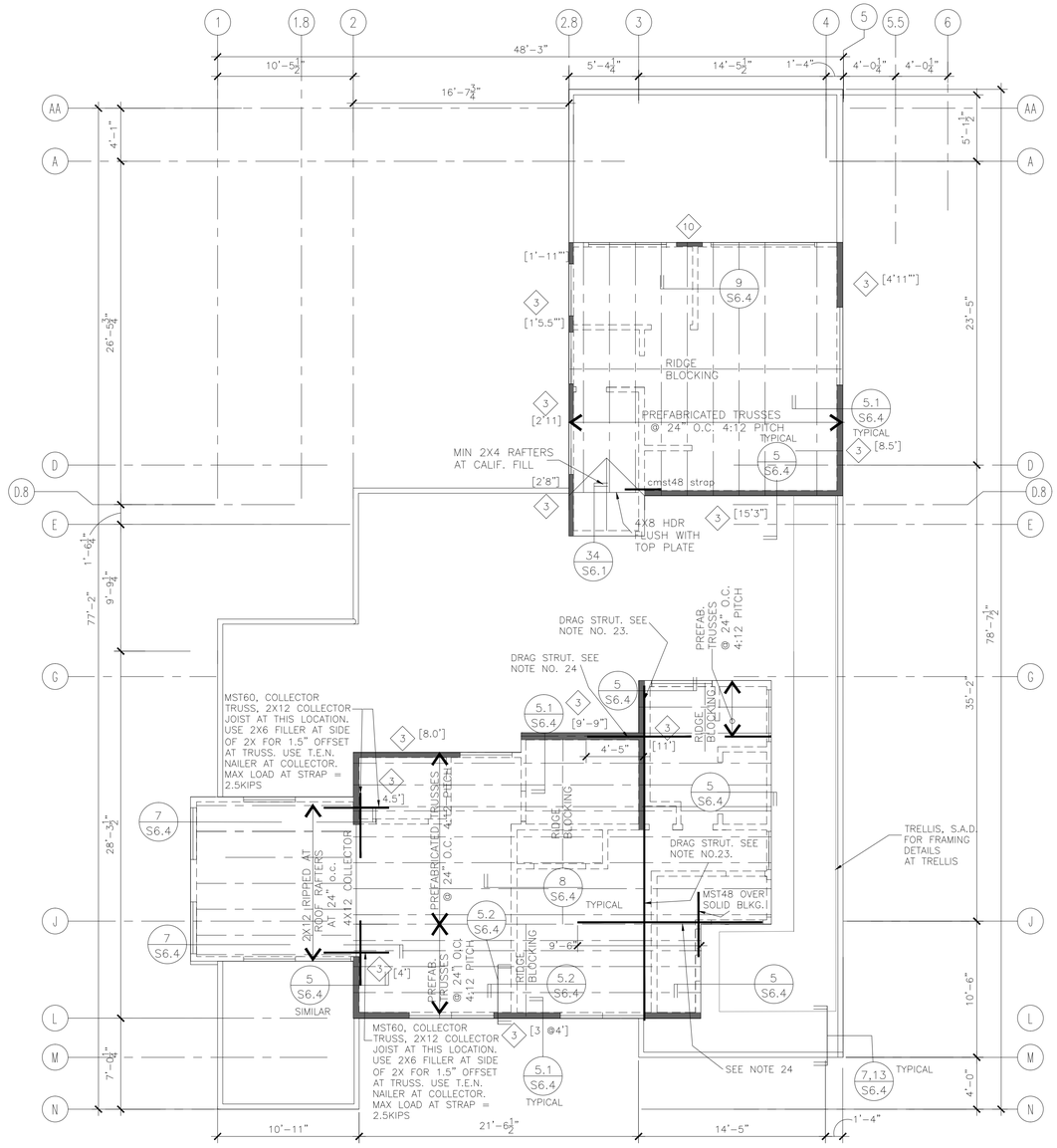

01 COMMUNITY CENTER ROOF FRAMING PLAN

SCALE: ¼" = 1'-0" UNLES NOTED OTHERWISE, MIN HEADERS AT OPENINGS AT SHOWN THIS SHEET SHALL BE 6X8 AT EXTERIOR WALLS, 4X8 AT INTERIOR WALLS

ROOF FRAMING NOTES

1. SEE GENERAL NOTES ON SHEET S0.1.
2. SEE TYPICAL WOOD DETAILS ON SHEETS S6.1 AND S6.3.
3. WHERE NOTED ON PLAN, PROVIDE 2x12 TAPERED TO 2x10 AT 24" O.C. SEE ARCH
4. STRUCTURAL WOOD WALLS SUPPORTING THE ROOF ARE SHOWN THUS: OR THUS: WHERE PARAPET OCCURS. SEE ARCHITECTURAL DRAWINGS FOR NON-LOAD BEARING PARTITIONS.
5. WHERE NEW METAL FRAMING CONNECTORS ARE REQUIRED, "SIMPSON" CONNECTORS ARE DENOTED.
6. NOT USED.
7. SEE 4 3 / S6.1 FOR HEADER SIZES NOT CALLED OUT ON PLAN
8. SEE ARCH. DWGS. FOR SLOPES OF ROOFS.
9. ALL GLULAM BEAMS 24F-V4
10. [X] INDICATES CAMBER IN GLULAM BEAMS
11. SEE ARCH. DWGS. FOR EXACT LOCATION OF WINDOWS AND DOORS.
12. INDICATES NEW SHEAR WALL. SEE SCHEDULE ON SHEET S6.2.
13. ALL NEW WOOD FRAMED BEARING WALLS ARE 2x6 @ 16" O.C. TYP. U.N.O. USE 3x6 STUDS AT SHEAR WALLS
14. AT SHEAR WALL TYPE 9 AND 10 PROVIDE HARDY PANEL PER THE WIDTHS INDICATED ON THE SHEAR WALL SCHEDULE SHOWN ON SHEET S6.2. PROVIDE ASSOCIATED HOLDOWNS, SILL ANCHORAGE AND SHEAR TRANSFER DETAILS PER THE MANUFACTURES STANDARDS.
15. NOT USED.
16. ALL TJI'S ARE TJI/360, TYP U.N.O.
17. WHERE NOTED ON PLAN PROVIDE 11 7/8" DP TJI JOIST AT 24" o.c..
18. ROOF SHEATHING IS 5/8" STRUCT 1 PLYWOOD w/ 10d NAILS AT 4" o.c., PROVIDE BLOCKING.
19. NOT USED.
20. U.N.O. TOP PLATE SPLICES ALONG GRIDLINES THAT ARE SHEARWALLS SHALL BE MST48
21. USE 8'-0" LONG CMST12 BOTH WAYS, CENTER ON CORNER BLOCK FLOOR JOISTS AS REQUIRED
22. NOT USED.
23. INDICATES DRAG STRUT/CHORD USING CMST12 CONT. STRAP. SEE 10B / S6.3 FOR CONNECTION INFO.
24. DESIGN TRUSSES AT STRUT LOCATIONS FOR 2.5 KIP LOAD AT TOP CHORD. USE CMST12 STRAP AS TENSION TIE UNLESS NOTED OTHERWISE
25. WHERE NOTED ON PLAN INDICATES EXTENT OR TAPERED INSULATION. SEE ARCHITECTURAL DRAWING FOR ADDITIONAL INFORMATION
26. FOR STAIR 1 AND STAIR 2 FRAMING DETAILS AND ELEVATIONS, SEE SHEET S5.1

REVISIONS	BY
9/26/2011 - PLAN CHECK	G.O.

REGISTERED PROFESSIONAL ENGINEER JOSEPH OAKLEY JR. No. 2000 Exp. 09/30/11 STRUCTURAL STATE OF CALIFORNIA

OAKLEY & OAKLEY
ARCHITECT, CIVIL & STRUCTURAL ENGINEERS
OAKLAND, CALIFORNIA 94621
510.562.6028 RIVERSIDE, 615
FAX 510.562.6043

PROJECT TITLE: COMMUNITY CENTER
HARBOR PARK APARTMENTS
969 PORTER STREET, VALLEJO, CA 94560

DRAWING TITLE: **ROOF FRAMING PLAN**

Date:	08/30/2011
Scale:	AS NOTED
Drawn:	STAFF
Checked:	RY
Job No.:	2011-09
Sheet:	**S1.4**
Of	Sheets

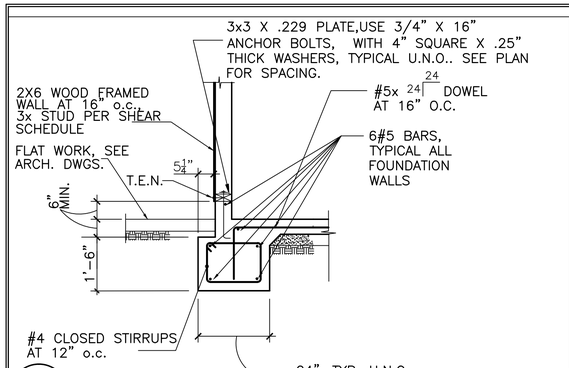

1 / S3.2 1/2"=1'-0"

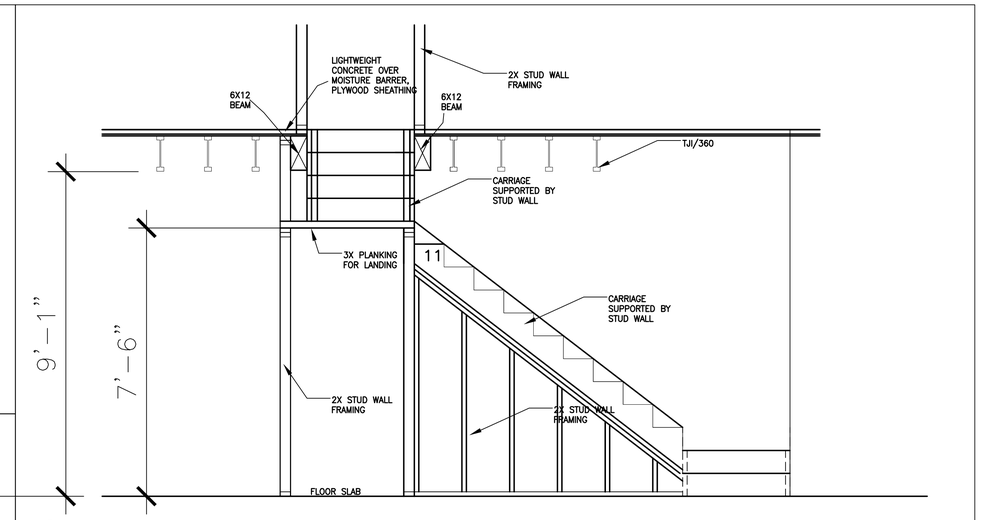

5 / S3.2 STAIR ELEVATION AND SECTION AT UNIT C
1/2"=1'-0"

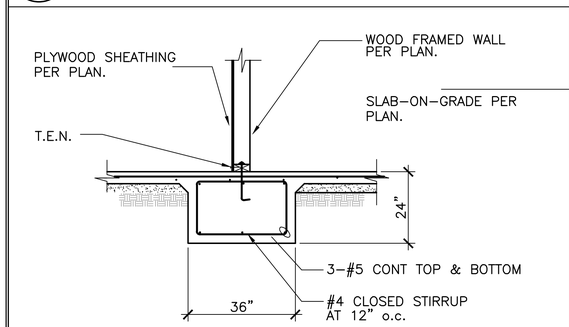

2 / S3.2 SECTION
1/2"=1'-0"

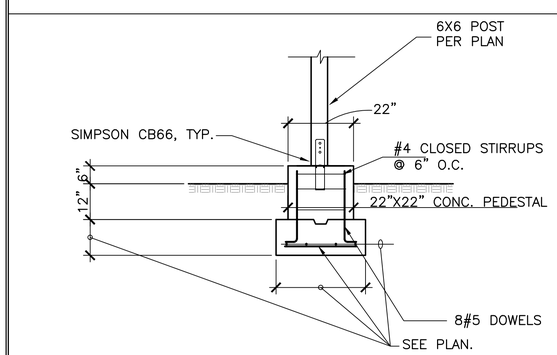

3 / S3.2 SECTION
1/2"=1'-0"

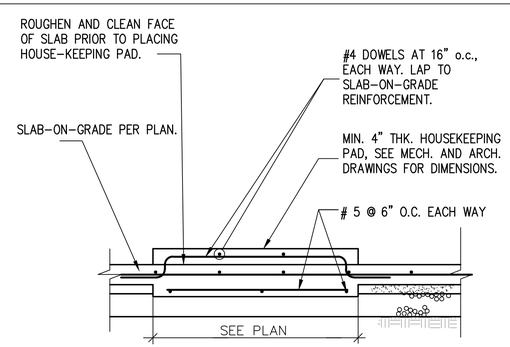

6 / S3.2 WHEEL CHAIR FOUNDATION
1/2"=1'-0"

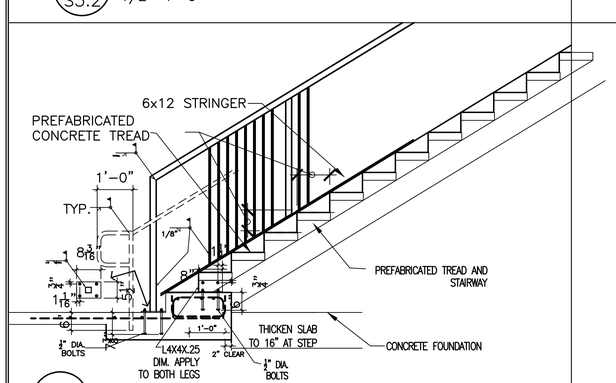

4 / S3.2 STAIR STRINGER AT BOT.
SCALE 1/2"=1'-0"

NOTE: SEE DETAILS 3/S3.2 AND 6/S3.2 FOR CALLOUTS AND REINFORCEMENT NOT SHOWN

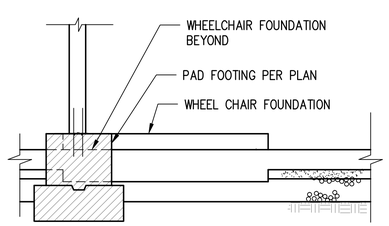

7 / S3.2 WHEEL CHAIR FOUNDATION
1/2"=1'-0"

REVISIONS	BY
9/26/2011 – PLAN CHECK	G.O.

REGISTERED PROFESSIONAL ENGINEER JOSEPH OAKLEY JR. No. 2000 Exp. 09/30/11 STRUCTURAL STATE OF CALIFORNIA

OAKLEY & OAKLEY
ARCHITECT, CIVIL & STRUCTURAL ENGINEERS
7 ROLAND WAY
OAKLAND, CA 94601
510.562.6028
FAX 510.562.6043

PROJECT TITLE:
COMMUNITY CENTER
HARBOR PARK APARTMENTS
969 PORTER STREET, VALLEJO, CA 94560

DRAWING TITLE:
FOUNDATION DETAILS

Date:	08/30/2011
Scale:	AS NOTED
Drawn:	STAFF
Checked:	RY
Job No.:	2011-09
Sheet:	S3.2
Of	Sheets

Jan 27, 2014 - 11:25pm \\SERVER\Server Drive D\Year 2011 Jobs\2011-09.3 - Community Bldg\REVISED DRAWINGS FOR NEGOTIATED CONTRACT WITH WE LYONS\STRUCTURAL S3.2.dwg

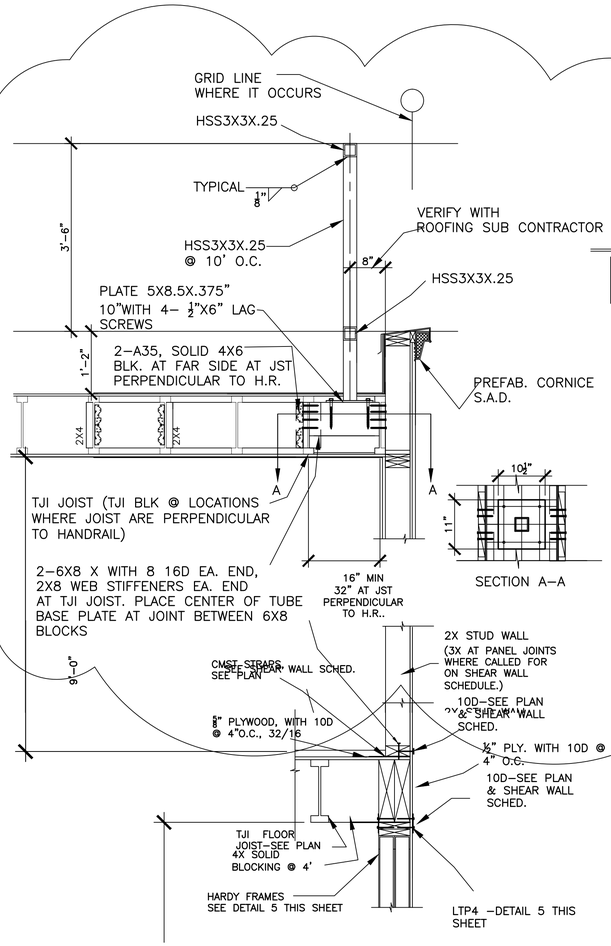

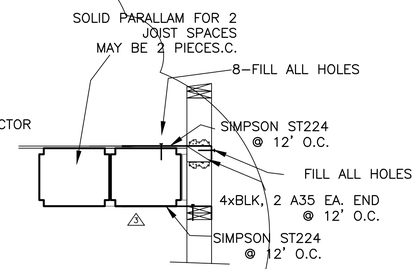

1.1 TYPICAL PARAPET SUPPORT

SCALE: 3/4" =1'-0"

SEE 1.2 FOR DETAILS AT WALLS PERPENDICULAR TO JOIST

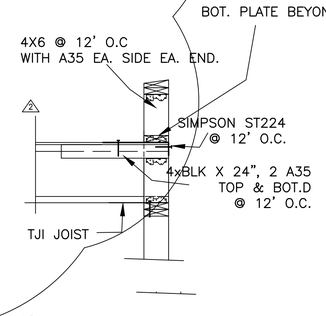

1.2 TYPICAL PARAPET SUPPORT

SCALE: 3/4" =1'-0" FILL ALL NAIL HOLE U.N.O.

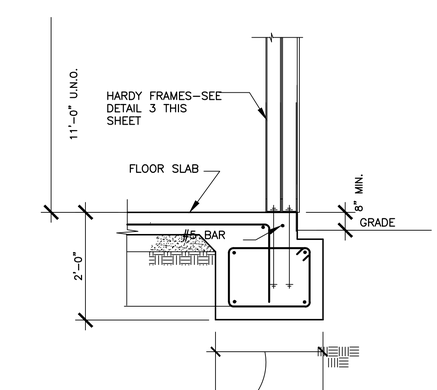

1 TYPICAL EXTERIOR WALL SECTION

SCALE: 3/4" =1'-0"

SEE DETAIL 1/S2.0 FOR CALL OUTS AT FOUNDATION

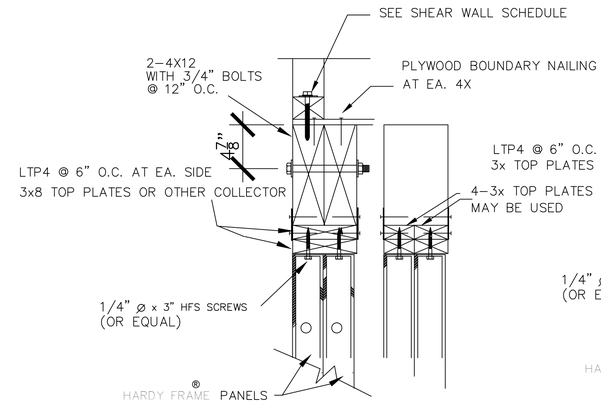

HARDY FRAME® SECTION AT TOP PLATES
FACE TO FACE INSTALLATION

5

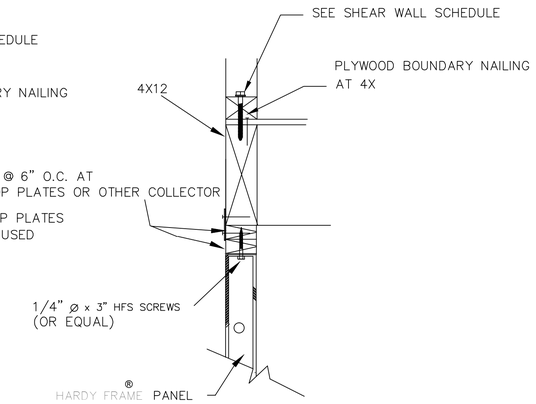

HARDY FRAME® SECTION AT TOP PLATES
SINGLE FACE INSTALLATION

6

ENGINEER OF RECORD IS PERMITTED TO MODIFY THIS DETAIL TO ACCOMMODATE A SPECIFIC CONDITION

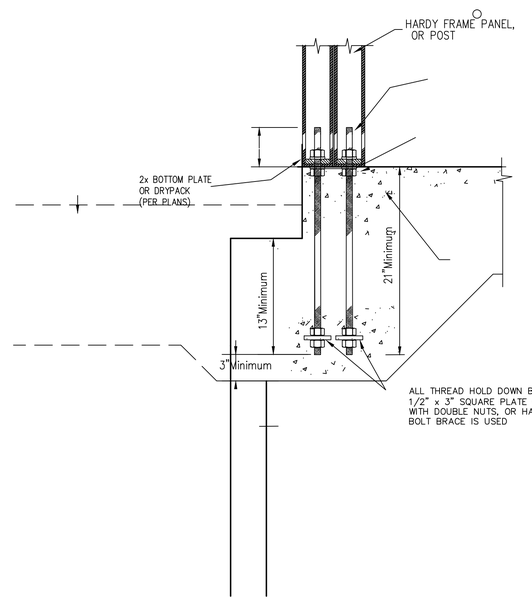

HARDY FRAME® SECTION AT BASE - FACE TO FACE POST & PANEL DOUBLE NUT

3 TYPICAL SECTION AT SIDE BY SIDE HARDY FRAMES

NO SCALE

ENGINEER OF RECORD IS PERMITTED TO MODIFY THIS DETAIL TO ACCOMMODATE A SPECIFIC CONDITION

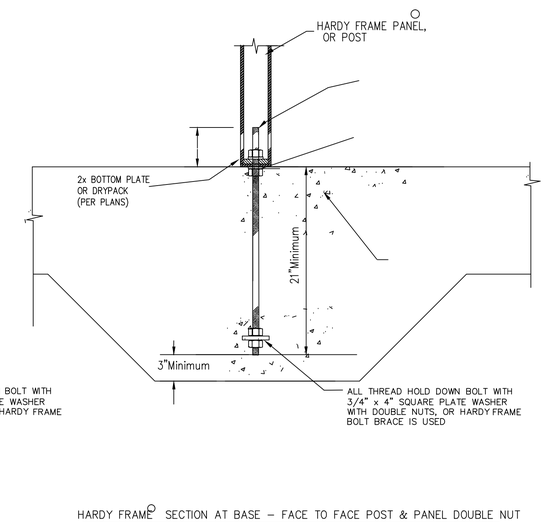

HARDY FRAME® SECTION AT BASE - FACE TO FACE POST & PANEL DOUBLE NUT

3A TYPICAL SECTION AT SINGLE HARDY FRAME

NO SCALE

REVISIONS	BY
9/26/2011 - PLAN CHECK	G.O.
1-8-14 BIDDING	T.G..
1-27-14 BIDDING	JO.

REGISTERED PROFESSIONAL ENGINEER
JOSEPH OAKLEY JR.
No. 2000
Exp. 09/30/15
STRUCTURAL
STATE OF CALIFORNIA

OAKLEY & OAKLEY
ARCHITECT, CIVIL & STRUCTURAL ENGINEERS
2 ARGONAUT
CLARENCEWAERS DRIVE, SUITE 815
510.562.6028
FAX 510.562.6043

PROJECT TITLE:
COMMUNITY CENTER
HARBOR PARK APARTMENTS
969 PORTER STREET, VALLEJO, CA 94560

DRAWING TITLE:

Date:	08/30/2011
Scale:	AS NOTED
Drawn:	STAFF
Checked:	RY
Job No.:	2011-09
Sheet:	S3.21
Of	Sheets

Jan 27, 2014 - 10:51pm \\SERVER\Server Drive D\Year 2011 Jobs\2011-09.3 - Community Bldg\REVISED DRAWINGS FOR NEGOTIATED CONTRACT WITH WE LYONS\STRUCTURAL\S3.21.dwg

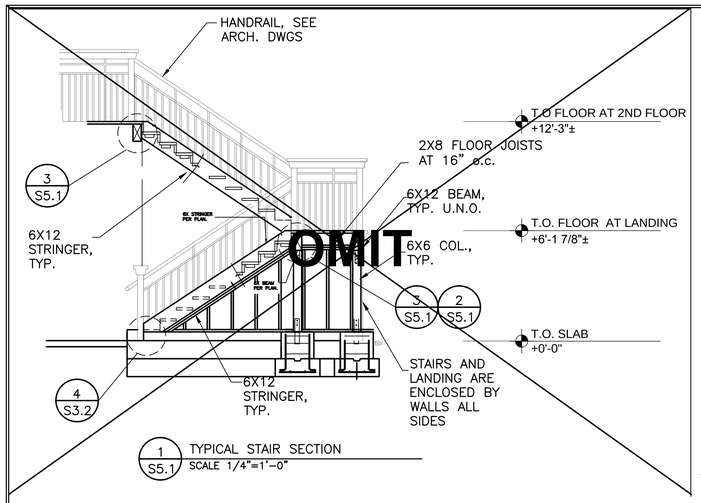

1 S5.1 TYPICAL STAIR SECTION
SCALE 1/4"=1'-0"

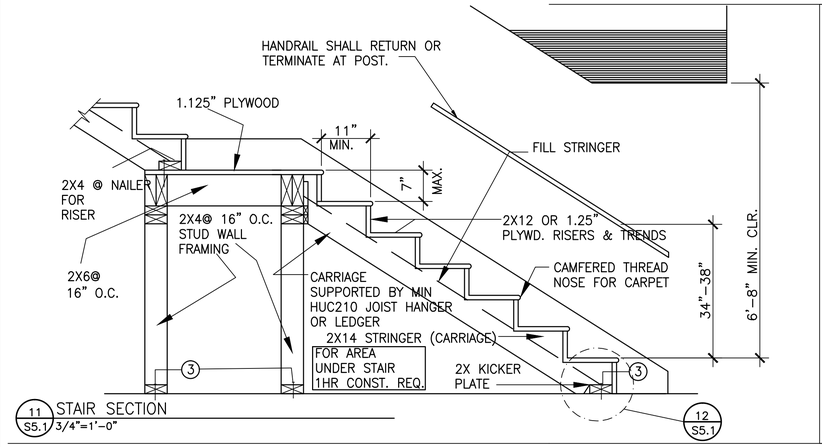

11 S5.1 STAIR SECTION
3/4"=1'-0"

1 2X14 STRINGERS (MIN 2) (PRESSURE TREATED)

2 2X12 OR 1.125" PLY TREADS & RISERS (MIN 3/4")

3 2X4 THRUST PLATE OR SILL ANCHORED W/ SHOT PINS AT 24" O.C. W/2 DIA. WASHERS (SIMPSON PDPWL-300 PINS-ICC-ES ER 4546) NOTES ON FOUNDATION PLAN)

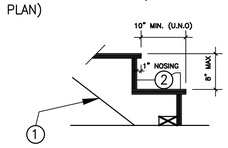

12 S5.1 STRINGER @ FLOOR
3/4"=1'-0"

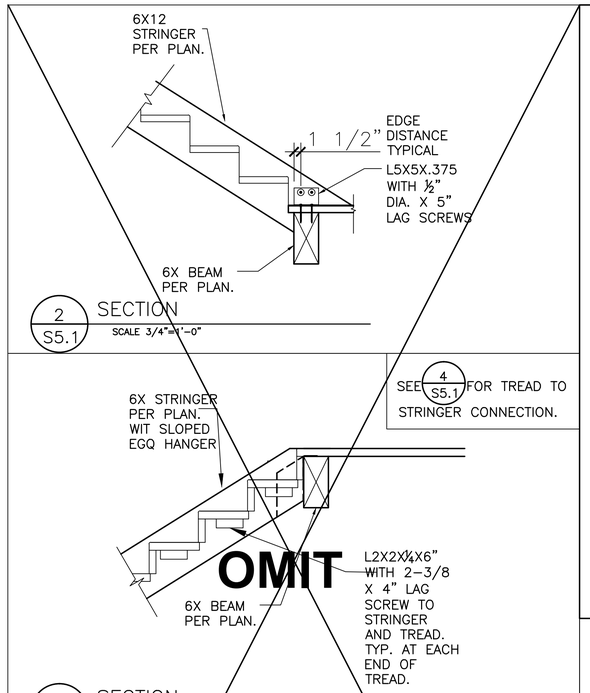

2 S5.1 SECTION
SCALE 3/4"=1'-0"

3 S5.1 SECTION
SCALE 3/4"=1'-0"

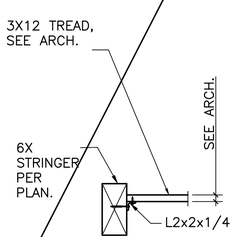

STAIRS

4 S5.1 TYPICAL STRINGER CONNECTIONS
SCALE 3/4"=1'-0"

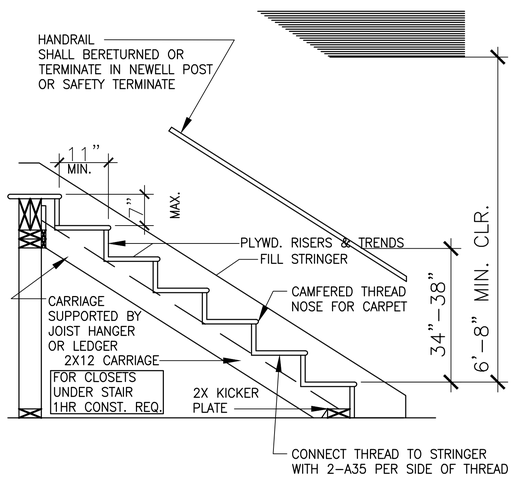

5 S5.1 STAIR SECTION
1/2"=1'-0"

1 PLYWD SUBFLOOR

2 3/4" PLYWOOD RISERS

3 2X12 STRINGERS (MIN 3)

4 DBL FLOOR JOIST OR HEADER

5 SIMPSON THA213 TRUSS HANGER

6 1-1/8" PLYWOOD OR 2X12 THREADS

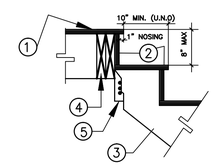

STRINGER @ HEADER

7 S5.1 STAIR SECTION
1/2"=1'-0"

1 PLYWD SUBFLOOR

2 3/4" PLYWOOD RISERS

3 2X12 STRINGERS (MIN 3)

4 5/8" TYPE"X"G.B. (WHEN REQ'D)

5 DBL FLOOR JOIST OR HEADER

6 2X CRIPPLE WALL

7 1/2"GYP BD

8 4X HDR OR WALL WHERE OCCURS

9 SIMPSON THA213 TRUSS HGR

10 1-1/8" PLYWOOD OR 2X12 THREADS CONNECT THREAD TO STRINGER WITH 2-A35 PER SIDE OF THREAD

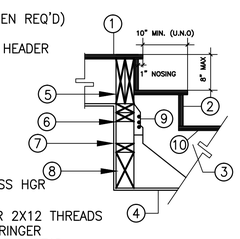

STRINGER @ WALL

9 S5.1 STAIR SECTION
1/2"=1'-0"

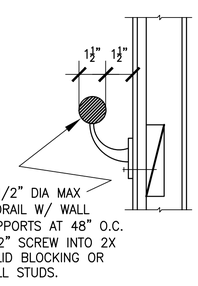

HAND RAIL DETAIL

6 S5.1 STAIR SECTION

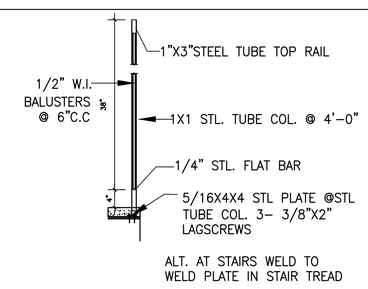

RAILING

8 S5.1 STAIR SECTION
1/2"=1'-0"

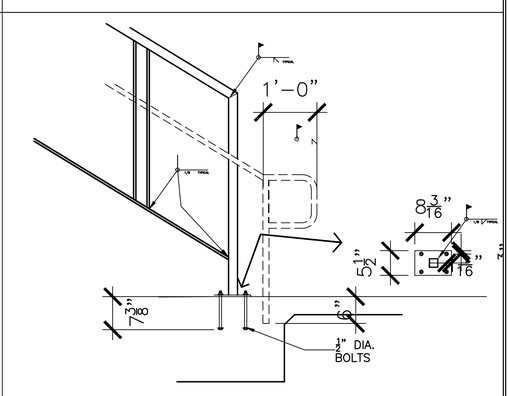

10 S5.1 STAIR SECTION
1/2"=1'-0"

REVISIONS	BY
9/26/2011 - PLAN CHECK	G.O.

REGISTERED PROFESSIONAL ENGINEER JOSEPH OAKLEY JR. No. 2000 Exp. 09/30/11 STRUCTURAL STATE OF CALIFORNIA

OAKLEY & OAKLEY
ARCHITECT, CIVIL & STRUCTURAL ENGINEERS
7700 EDGEWATER DRIVE, SUITE 615
OAKLAND, CA 94621
510.562.6028
FAX 510.562.6043

PROJECT TITLE: COMMUNITY CENTER
HARBOR PARK APARTMENTS
969 PORTER STREET, VALLEJO, CA 94560

DRAWING TITLE: **STEEL FRAMING DETAILS**

Date:	08/30/2011
Scale:	AS NOTED
Drawn:	STAFF
Checked:	RY
Job No.:	2011-09
Sheet:	**S5.1**
Of	Sheets

Jan 27, 2014 - 11:27pm \\SERVER\Server Drive D\Year 2011 Jobs\2011-09.3 - Community Bldg\REVISED DRAWINGS FOR NEGOTIATED CONTRACT WITH WE LYONS\STRUCTURALS51.dwg

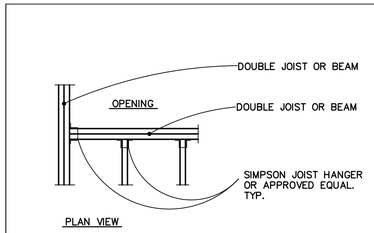

31 TYP. JOIST/RAFTER FRAMING @ OPENING
NOT TO SCALE

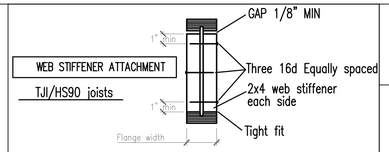

W	WEB STIFFENER SIZE
3 1/2"	1 1/2"

(1) Web stiffener material shall be sheathing meeting the requirements of PS 1 or PS 2 with face grain vertical.
(2) 2x4 construction grade or better.

30 TJI WEB STIFFENER DETAIL

29 NOT USED
NOT TO SCALE

28 NOT USED
NOT TO SCALE

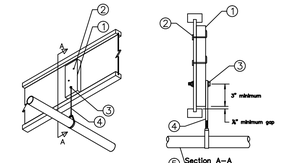

1. 2x6 block with grain oriented vertically and minimum ¼" gap between block and flange
2. Two 10d (3") common nails, clinched
3. ½" diameter machine bolt with washers – cinch tight
4. Hanger rod or support per NFPA 13
5. Pipe or duct, see mech. or plumbing dwgs.

27 Pipe/Duct Suport at maximum hanger spacing: 30" o.c.
NOT TO SCALE

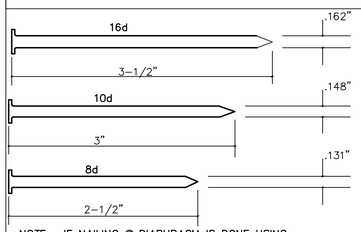

NOTE: IF NAILING @ DIAPHRAGM IS DONE USING POWER DRIVEN FASTENERS USE HILTI OR EQ.–POWER DRIVEN FASTNERS ARE NOT RECOMMENDED FOR SMALL ALTERATION WORK; TOE, SLANT OR END NAILING–USE FULL HEAD NAILS ONLY.

37 FULL SCALE COMMON NAILS
FULL SIZE

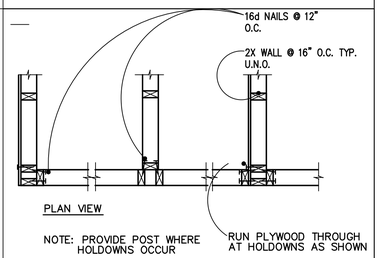

NOTE: PROVIDE POST WHERE HOLDOWNS OCCUR

36 TYPICAL STUD WALL CONNECTIONS
NOT TO SCALE

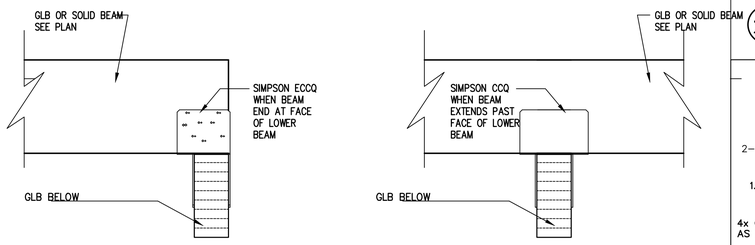

35 TYPICAL BEAM CONNECTIONS
NOT TO SCALE

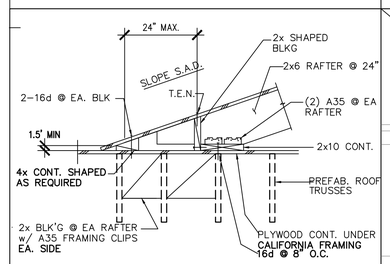

34 CALIFORNIA (OVER) FRAMING
NOT TO SCALE

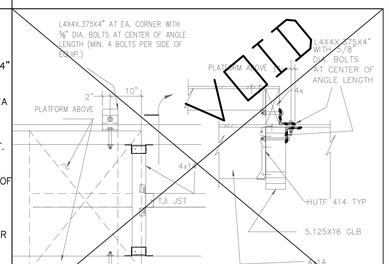

33 HVAC PLATFORM
NOT TO SCALE

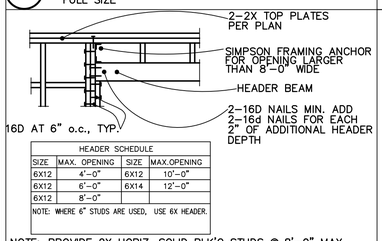

HEADER SCHEDULE			
SIZE	MAX. OPENING	SIZE	MAX.OPENING
6X12	4'–0"	6X12	10'–0"
6X12	6'–0"	6X14	12'–0"
6X12	8'–0"		
NOTE: WHERE 6" STUDS ARE USED, USE 6X HEADER.			

NOTE: PROVIDE 2X HORIZ. SOLID BLK'G STUDS @ 8'–0" MAX. ALSO PROVIDE 2X FIRE BLK'G @ CEILING LINE AS REQ'D.

43 TYP. FRAMING AT STUD WALL OPENING
NOT TO SCALE

42 NOT USED
SCALE: 1/2"=1'–0"

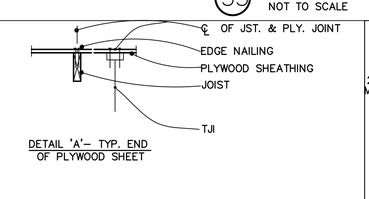

DETAIL 'A'– TYP. END OF PLYWOOD SHEET

THICKNESS	TYPICAL EDGE NAILING=T.E.N.	BLKG REQUIRED
5/8"	10d @ 4" O.C.	YES
3/4"	10d @ 4" O.C.	YES
1 1/8"	10d @ 4" O.C.	YES

PLYWOOD SPEC.S:

PROVIDE FIELD NAILING OF 10d @ 12" O.C. @ ROOF
PROVIDE FIELD NAILING OF 10d @ 10" O.C. @ FLOORS
T.E.N.=TYPICAL EDGE NAILING

41 TYPICAL PLYWOOD ROOF/FLOOR SHEATING
NOT TO SCALE

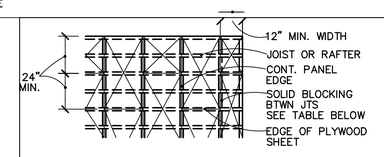

NOTES:
1. RUN LONG DIMENSION OF PLYWOOD SHEETS ACROSS (PERPENDICULAR TO) JOISTS.
2. GLUE ALL PLY. TO FRAMING MEMBERS. TYP. AT FLOORS. GLUE NOT REQUIRED AT ROOFS.
3. MINIMUM DIST. OF PLY. EDGE TO NAILS =3/8"
4. ALL JOISTS SHALL BE ON A 4'–0" MODULE TO COINCIDE W/ PLY. PATTERN.
5. WHERE JOIST LAP SPLICE OCCURS AT THE END OF PLY. SHEETS, PROVIDE 2X4 NAILER ON LAPPING JOIST WITH 2–16D @ 6" O.C.

40 TYPICAL PLYWOOD ROOF/FLOOR SHEATING
NOT TO SCALE

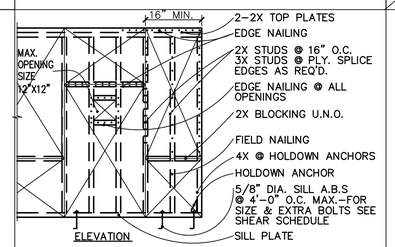

NOTE:
1. NAILS SHALL HAVE A MIN. OF 3/8" EDGE DIST.
2. 2X STUDS & BLKG. @ ALL PLYWD. JOINTS U.N.O.
3. PLYWD. SHEET SHALL RUN PARALLEL W/ STUDS.

39 TYPICAL PLYWOOD SHEAR PANEL
NOT TO SCALE

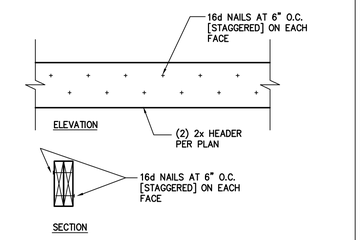

38 TWO PIECE CONTINUOS HEADER
NOT TO SCALE

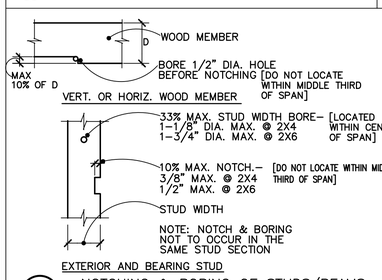

49 NOTCHING & BORING OF STUDS/BEAMS
NOT TO SCALE

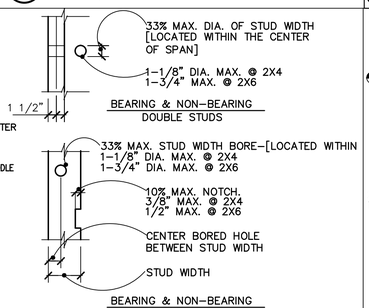

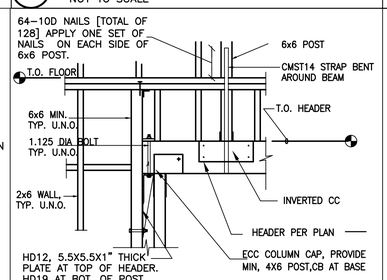

47 HOLDOWN AT DISCONTINUOUS SHEAR WALL

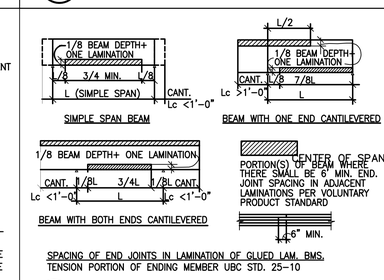

46 TYPICAL GLULAM BEAM LAMINATION DETAIL

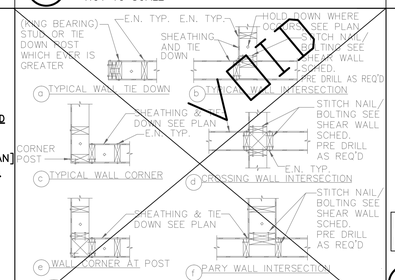

45 SHEAR WALL CONFIGURATIONS
NOT TO SCALE – SEE 4/SDET6.8

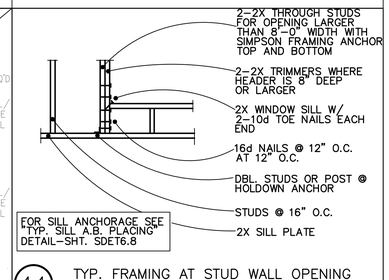

44 TYP. FRAMING AT STUD WALL OPENING
NOT TO SCALE

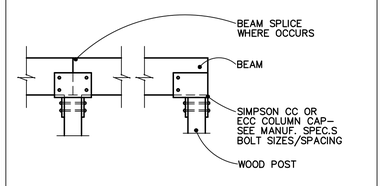

55 TYP. POST TO BEAM
NOT TO SCALE

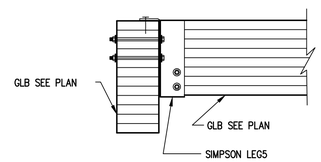

54 GLB TO GLB CONNECTION
NOT TO SCALE

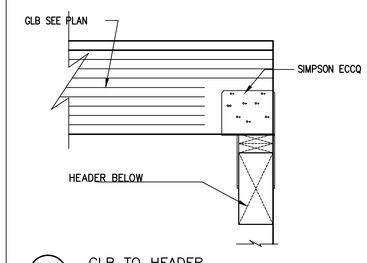

53 GLB TO HEADER
NOT TO SCALE

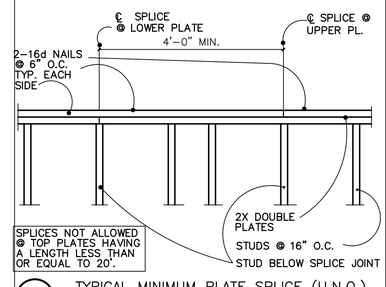

SPLICES NOT ALLOWED @ TOP PLATES HAVING A LENGTH LESS THAN OR EQUAL TO 20'.

52 TYPICAL MINIMUM PLATE SPLICE (U.N.O.)
NOT TO SCALE
SEE DETAIL 1A/S6.2 FOR SPLICES AT PLATES AT SHEAR WALLS

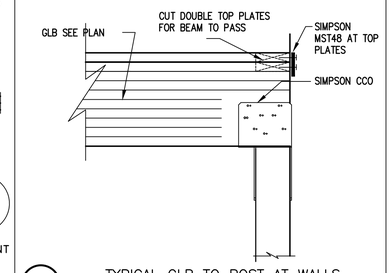

51 TYPICAL GLB TO POST AT WALLS

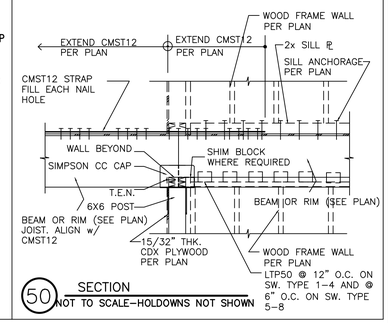

50 SECTION
NOT TO SCALE–HOLDOWNS NOT SHOWN

REVISIONS	BY
9/26/2011 – PLAN CHECK	G.O.

REGISTERED PROFESSIONAL ENGINEER JOSEPH OAKLEY JR. No. 2000 Exp. 09/30/11 STRUCTURAL STATE OF CALIFORNIA

OAKLEY & OAKLEY
ARCHITECT, CIVIL & STRUCTURAL ENGINEERS
7000 EDGEWATER DRIVE, STE. 615
OAKLAND, CA 94621
510.562.6028
FAX 510.562.6043

PROJECT TITLE:
COMMUNITY CENTER
HARBOR PARK APARTMENTS
969 PORTER STREET, VALLEJO, CA 94560

DRAWING TITLE:
TYPICAL WOOD FRAMING DETAILS

Date:	08/30/2011
Scale:	AS NOTED
Drawn:	STAFF
Checked:	RY
Job No.:	2011–09
Sheet:	S6.1
Of	Sheets

Jan 27, 2014 – 11:29pm \\SERVER\Server Drive D\Year 2011 Jobs\2011-09.3 – Community Bldg\REVISED DRAWINGS FOR NEGOTIATED CONTRACT WITH WE LYONS\STRUCTURAL S6.1.dwg

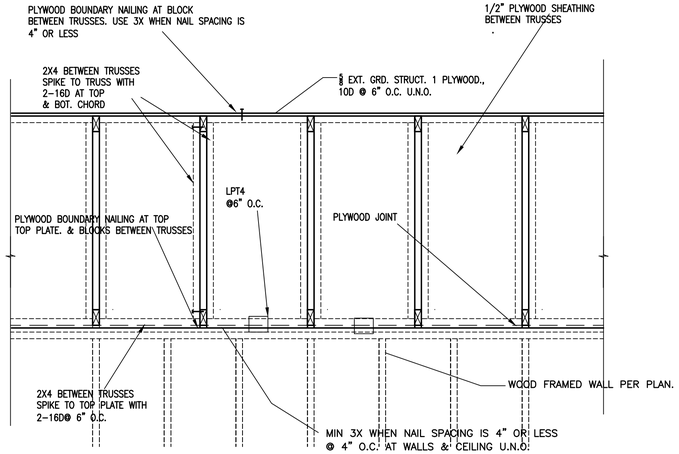

3A TYPICAL SHEARWALL DETAIL–WALL PERPENDICULAR TO TRUSSES
SCALE 3/4"=1'-0"

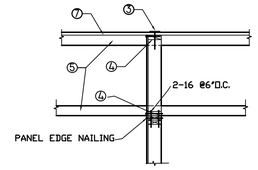

SECTION B-B
NO SCALE

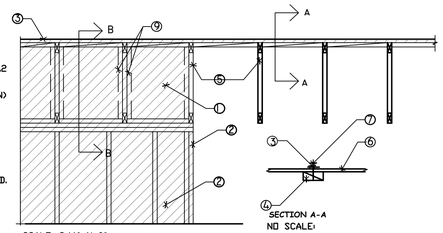

1. EXTEND SHEAR WALL NAILING AS WALL BELOW
2. SHEAR WALL-SEE SCHEDULE, SHT S6.2
3. CONTINUOUS CS16, OR CMST STRAP (LENGTH AS SHOWN ON FRAMING PLAN)
4. 2x4 BLOCKING FLAT BETWEEN TRUSSES WITH PANEL EDGE NAILING
5. TRUSSES, BOT. & TOP CHORD
6. ROOF DIAPHRAGM EDGE NAIL'G AT COLLECTOR, (DO NOT JOINT PLYWD. AT COLLECTOR)
7. 10D AT 4" O.C.
8. ST6236
9. 2x NAILERS & FILLER (IF REQUIRED) NAILED TOGETHER W/SILL NAIL'G

SECTION A-A
NO SCALE

1B SHEAR WALL EXTENSION & COLLECTOR DETAIL–TRUSSES/JOIST PERPENDICULAR TO SHEAR WALL
SCALE 3/4"=1'-0"

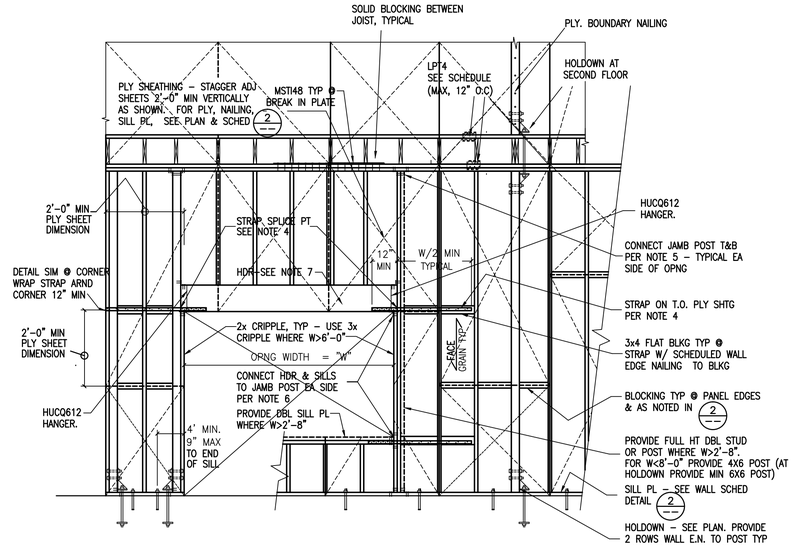

1A TYPICAL SHEAR WALL FRAMING DETAIL–NEW WOOD FRAMED WALL SIM @ NON-BEARING WALLS

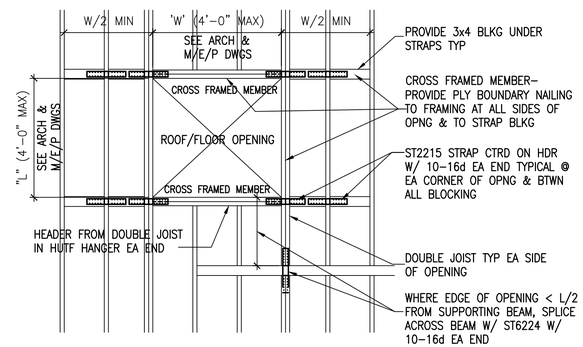

4 TYP ROOF OPENING DETAIL

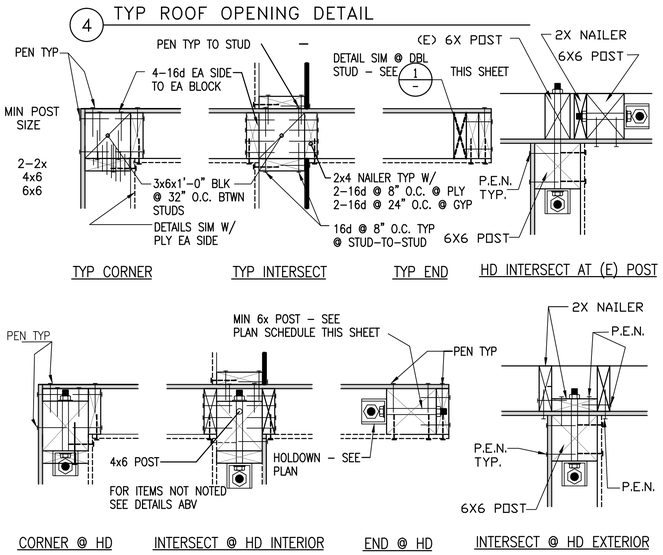

5 TYP SECTIONS – WALL INTERSECTIONS

SHEAR WALL SCHEDULE

SYM.	SHEARWALL DESCRIPTION (AT APA RATED PANELS USE COMMON NAILS OR GALV. BOX NAILS)	TOP R SHEAR TRANSFER	SILL PLATE ANCHORAGE: ANCHOR BOLTS (SEE NOTE 11)	SILL ATTACH.: LAG SCREWS	LPT4 OR LPT5
1	15/32" CDX PLYWOOD (1) SIDE W/ 10d @ 6" o.c.. USE 2x WALL AND 2x SOLE PLATE.	SEE PLAN	3/4"ø A.B. AT 36" o.c.	*	@ 12" O.C.
2	15/32" CDX PLYWOOD (1) SIDE W/ 10d @ 4" o.c.. USE 3x WALL AND 3x SOLE PLATE.	SEE PLAN	3/4"ø A.B. AT 30" o.c.	*	@ 12" O.C.
3	15/32" CDX PLYWOOD (1) SIDE W/ 10d @ 3" o.c.. USE 3x WALL AND 3x SOLE PLATE.	SEE PLAN	3/4"ø A.B. AT 18" o.c.	3/8"øX5" LONG @ 5" o.c.	@ 12" O.C.
4	15/32" CDX PLYWOOD (1) SIDE W/ 10d @ 2" o.c.. USE 3x WALL AND 3x SOLE PLATE.	SEE PLAN	3/4"ø A.B. AT 12" o.c.	3/8"øX5" LONG @ 4" o.c.	@ 6" O.C.
5	15/32" CDX PLYWOOD (2) SIDE W/ 10d @ 6" o.c.. USE 2x WALL AND 2x SOLE PLATE.	SEE PLAN	3/4"ø A.B. AT 36" o.c.	*	@ 6" O.C.
6	15/32" CDX PLYWOOD (2) SIDE W/ 10d @ 4" o.c.. USE 3x WALL AND 3x SOLE PLATE.	SEE PLAN	3/4"ø A.B. AT 30" o.c.	*	@ 6" O.C. AT EA. SIDE
7	15/32" CDX PLYWOOD (2) SIDE W/ 10d @ 3" o.c.. USE 3x WALL AND 3x SOLE PLATE.	SEE PLAN	3/4"ø A.B. AT 18" o.c.	3/8"øX5" LONG @ 5" o.c.	@ 6" O.C. AT EA. SIDE
8	15/32" CDX PLYWOOD (2) SIDE W/ 10d @ 2" o.c.. USE 3x WALL AND 3x SOLE PLATE.	SEE PLAN	3/4"ø A.B. AT 12" o.c.	3/8"øX5" LONG @ 4" o.c.	@ 6" O.C. AT EA. SIDE
9	12" WIDE HARDY PANEL	SEE PLAN	SEE PLAN	SEE PLAN	
10	24" WIDE HARDY PANEL	SEE PLAN	SEE PLAN	SEE PLAN	

NOTES.

1. NOT USED.
2. APA RATED PANELS SHALL BE CDX OF THE FOLLOWING MATERIALS:
   PLYWOOD (NER-108)
   ORIENTED STRAND BOARD (NER-0397)
   WAFERBOARD (NER-124)
3. NAILING INDICATED IS TYP. EDGE NAILING. FOR FIELD NAILING 10d @ 12" O.C.
4. ALL HOLDOWNS EXCEPT MA4 ARE PLACED ON 6X6 POSTS TYP. U.N.O.
5. STAGGER JOINT AND SILL ℞ NAILING.
6. NOT USED
7. FURNISH 3x MEMBERS AT ALL SHEAR WALLS, TYP. U.N.O.
8. NAILS SHALL BE STAGGERED ON EACH SIDE OF SIDE OF STUD WHERE PLYWOOD PANELS ARE APPLIED ON BOTH SIDES OF WALL
9. * = NOT APPLICABLE
10. NOT USED
11. AT ALL ANCHOR BOLTS AT SILL PLATES PROVIDE A MINIMUM 3X3X0.229 THK PLATE WAASHER WITH NUT.

2 SHEAR WALL SCHEDULE & NOTES

NOTE:

UNDERDRIVEN NAILS ARE REQUIRED TO BE DRIVEN BY HAMMER SO THAT THE HEAD OF THE NAIL IS FLUSH WITH THE TOP SURFACE OF THE PLYWOOD.

MACHINE NAILING SHALL BE USED ONLY WHERE THE BACK SIDE CAN BE INSPECTED FOR "SHINERS".

"SHINERS" OR NAILS WHICH DO NOT PENETRATE FULLY INTO FRAMING OR BLOCKING SHALL BE REMOVED AND REPLACED. ALL REMEDIAL NAILING SHALL BE BY HAND.

IF ANY FRAMING MEMBERS, BLOCKING OR JOISTS RECEIVING THE POINTS OF NAILS, ARE DAMAGED (SPLIT, NAILS HIT TO CLOSE, ETC.) THEY SHALL BE REMOVED AND REPLACED.

GUN NAILING FOR TOE NAIL, END NAIL AND SLANT DRIVEN NAIL ARE NOT PERMITTED.

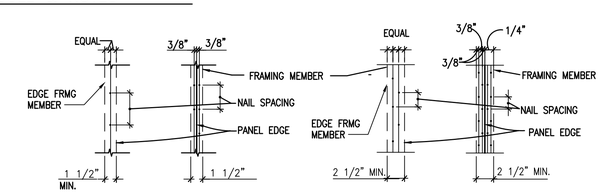

FOR NAIL SPACING 3" OR LESS O.C.

3 TYP. PLYWOOD EDGE NAILING
NO SCALE

TYPICAL WALL FRAMING NOTES:

1. LOCATE MECH OPENINGS IN NON-SHEAR WALLS WHERE POSSIBLE.
2. MECH OPENINGS IN SHEAR WALLS TO BE LOCATED 1'-6" MIN. FROM HOLD DOWN ANCHOR LOCATIONS.
3. ALL NAILING NOT SHOWN IS PER NAILING SCHEDULE ON S0.1 OR AS DETAILED ELSEWHERE.
4. PROVIDE STRAPS @ T&B CORNERS OF ALL SHEAR WALL OPENINGS PER THE FOLLOWING SCHEDULE:
   - OPNG < 4'-0" WIDE: CS20 STRAP W/ MIN 10-8d EA SIDE OF SPLICE PT
   - OPNG > 4'-0" WIDE: CS16 STRAP W/ MIN 16-8d EA SIDE OF SPLICE PT

   DISTRIBUTE NAILING EVENLY ALONG BLKG W/ 6-8d MINIMUM TO EA BLOCK FACE. SEE DETAIL 1.
5. CONNECT JAMB POSTS T&B AS FOLLOWS:
   - W<4'-0" WIDE: TOENAIL PER SCHED
   - W<8'-0" WIDE: A23 CLIP T&B

   SEE DRAWINGS FOR OTHER CONDITIONS
6. CONNECT HDRS & SILLS TO FULL HIEGHT JAMB POSTS (SOLID POST & BUILT-UP POSTS USING 2X6'S OR 3X6'S) EA SIDE AS FOLLOWS:
   - W<4'-0" WIDE: NAIL PER SCHED
   - W<6'-0" WIDE: A23 CLIP 1 SIDE OF HDRS/SILL
   - W<8'-0" WIDE: A23 CLIP EA SIDE OF HDRS/SILL

   SEE DRAWINGS FOR OTHER CONDITIONS
7. UNLESS OTHERWISE SHOWN ON PLAN, PROVIDE HEADERS @ T.O. OPNGS AS FOLLOWS:
   - W<4'-0" WIDE: HDR DEPTH = 6" NOM
   - W<6'-0" WIDE: HDR DEPTH = 8" NOM
   - W<8'-0" WIDE: HDR DEPTH = 10" NOM

   HEADERS TO BE SOLID TIMBERS W/ THICKNESS SAME AS WALL STUDS. SEE 43/S6.1 FOR ADDITIONAL INFORMATION.

REVISIONS	BY
9/26/2011 – PLAN CHECK	G.O.

REGISTERED PROFESSIONAL ENGINEER JOSEPH OAKLEY JR. No. 2000 Exp. 09/30/11 STRUCTURAL STATE OF CALIFORNIA

OAKLEY & OAKLEY
ARCHITECT, CIVIL & STRUCTURAL ENGINEERS
2 ROANOKE WATERWAY
ROANOKE CREEK DRIVE, STE 615
510.562.6028
FAX 510.562.6043

PROJECT TITLE: COMMUNITY CENTER
HARBOR PARK APARTMENTS
969 PORTER STREET, VALLEJO, CA 94560

DRAWING TITLE: TYPICAL SHEAR WALL DETAILS

Date:	08/30/2011
Scale:	AS NOTED
Drawn:	STAFF
Checked:	RY
Job No.:	2011-09
Sheet:	S6.2
Of	Sheets

Jan 27, 2014 - 11:30pm \\SERVER\Server Drive D\Year 2011 Jobs\2011-09.3 - Community Bldg\REVISED DRAWINGS FOR NEGOTIATED CONTRACT WITH WE LYONS\STRUCTURAL S6.2.dwg

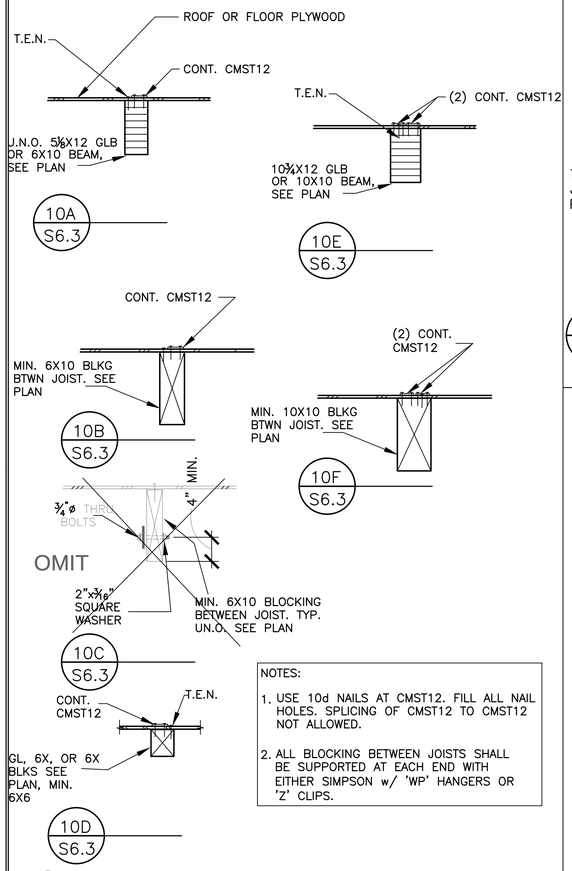

NOTES:

1. USE 10d NAILS AT CMST12. FILL ALL NAIL HOLES. SPLICING OF CMST12 TO CMST12 NOT ALLOWED.
2. ALL BLOCKING BETWEEN JOISTS SHALL BE SUPPORTED AT EACH END WITH EITHER SIMPSON w/ 'WP' HANGERS OR 'Z' CLIPS.

10 / S6.3 SECTION – DETAILS AT CONT. CMST12 STRAPS
3/4"=1'-0"

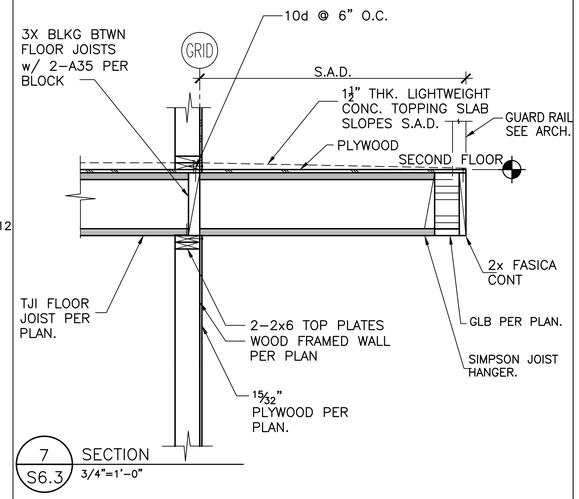

7 / S6.3 SECTION
3/4"=1'-0"

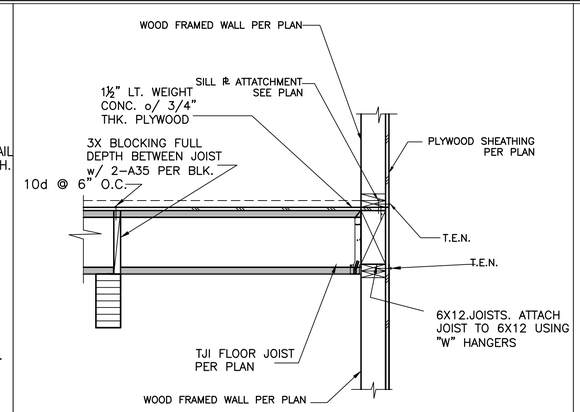

4 / S6.3 SECTION
3/4"=1'-0"

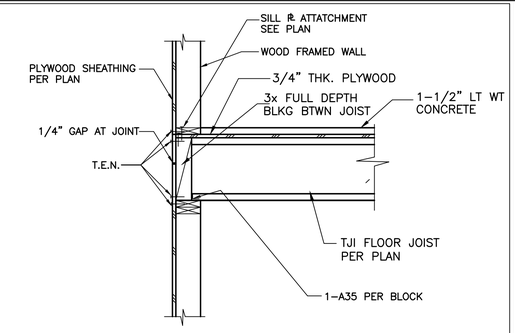

1 / S6.3 EXTERIOR SECTION AT 2ND/3RD FLOOR
SC: 3/4"=1'-0"

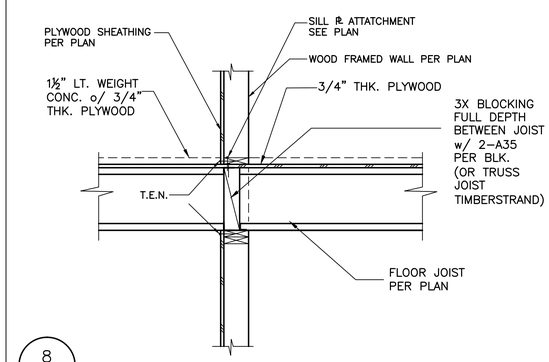

8 / S6.3
3/4"=1'-0"

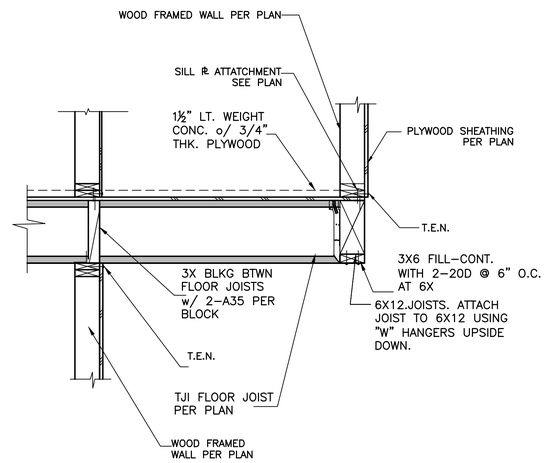

5 / S6.3 SECTION
3/4"=1'-0"

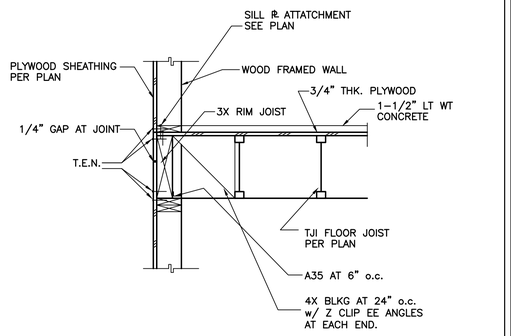

2 / S6.3 EXTERIOR SECTION AT 2ND/3RD FLOOR
SC: 3/4"=1'-0"

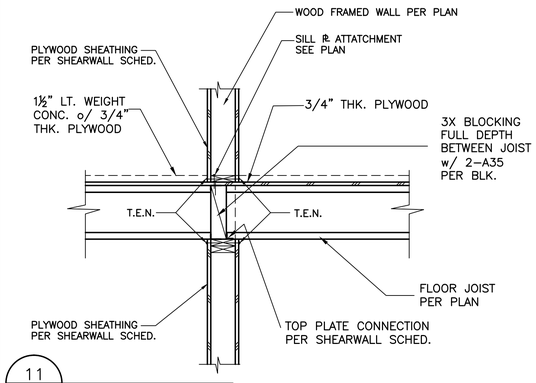

11 / S6.3 3/4"=1'-0"

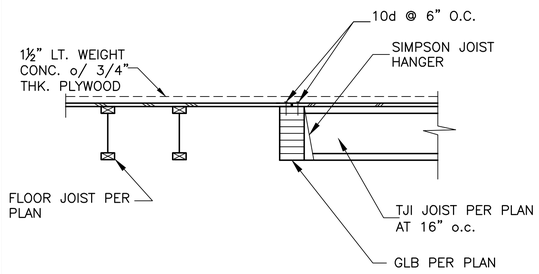

9 / S6.3 SECTION
NTS

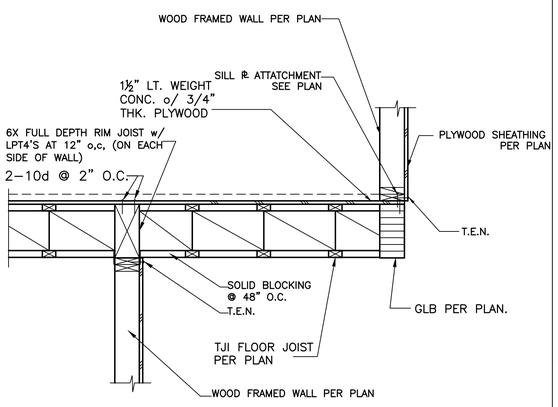

6 / S6.3 SECTION
NTS"

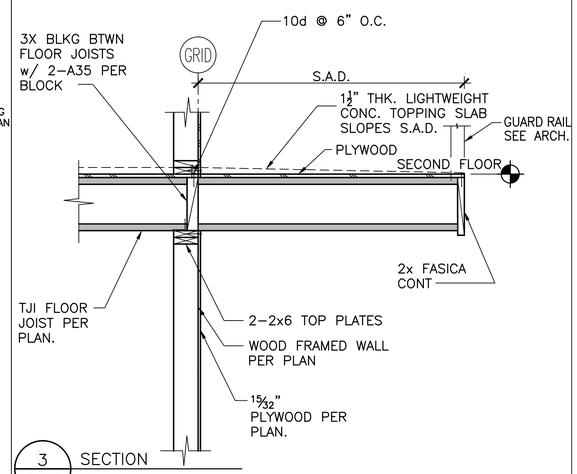

3 / S6.3 SECTION
NTS

REVISIONS	BY
9/26/2011 – PLAN CHECK	G.O.

REGISTERED PROFESSIONAL ENGINEER JOSEPH OAKLEY JR. No. 2000 Exp. 09/30/11 STRUCTURAL STATE OF CALIFORNIA

OAKLEY & OAKLEY
ARCHITECT, CIVIL & STRUCTURAL ENGINEERS
7000 EDGEWATER DRIVE, STE. 615
OAKLAND, CA 94621
510.562.6028
FAX 510.562.6043

PROJECT TITLE:
COMMUNITY CENTER
HARBOR PARK APARTMENTS
969 PORTER STREET, VALLEJO, CA 94560

DRAWING TITLE:
WOOD FRAMING DETAILS

Date:	08/30/2011
Scale:	AS NOTED
Drawn:	STAFF
Checked:	RY
Job No.:	2011-09
Sheet:	S6.3
Of	Sheets

Jan 27, 2014 - 11:33pm \\SERVER\Server Drive D\Year 2011 Jobs\2011-09.3 - Community Bldg\REVISED DRAWINGS FOR NEGOTIATED CONTRACT WITH WE LYONS\STRUCTURAL S6.3.dwg

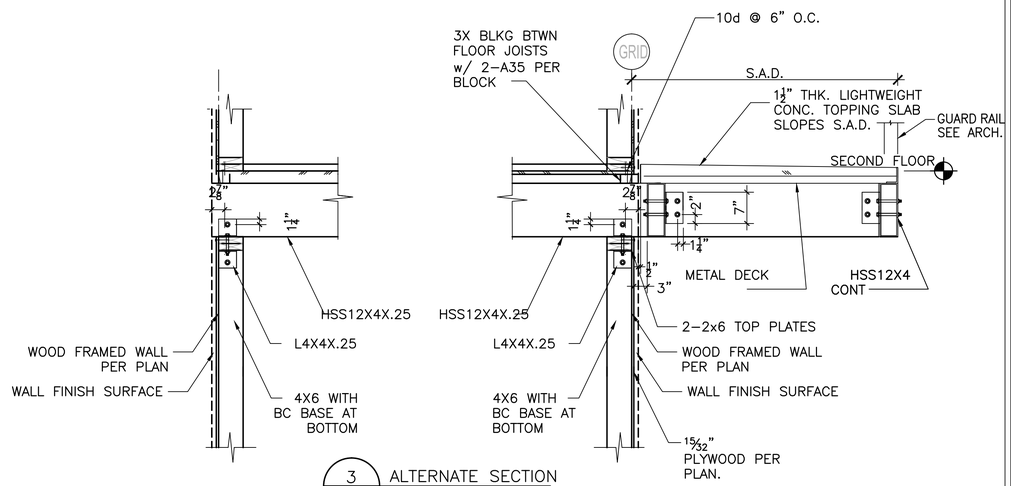

3 / S6.3.1 ALTERNATE SECTION
NTS

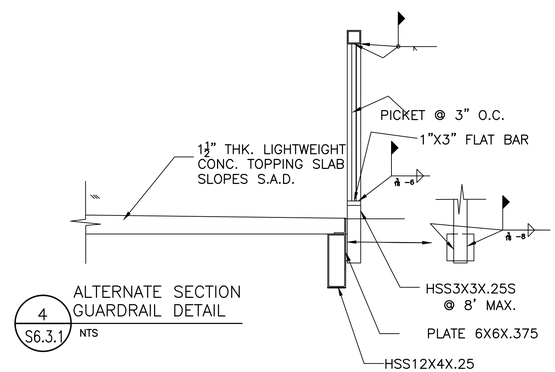

4 / S6.3.1 ALTERNATE SECTION GUARDRAIL DETAIL
NTS

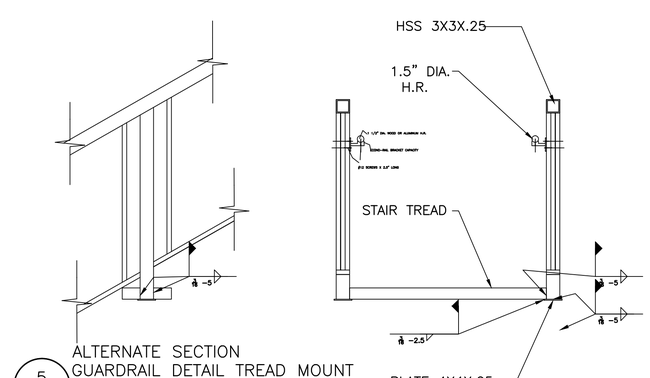

5 / S6.3.1 ALTERNATE SECTION GUARDRAIL DETAIL TREAD MOUNT
NTS

REVISIONS	BY
9/26/2011 - PLAN CHECK	G.O.

REGISTERED PROFESSIONAL ENGINEER JOSEPH OAKLEY JR. No. 2000 Exp. 09/30/11 STRUCTURAL STATE OF CALIFORNIA

OAKLEY & OAKLEY
ARCHITECT, CIVIL & STRUCTURAL ENGINEERS
7 KOLA EDGEWATER DRIVE, STE. 615
DOWNTOWN PLAZA
510.562.6028
FAX 510.562.6043

PROJECT TITLE:
COMMUNITY CENTER
HARBOR PARK APARTMENTS
969 PORTER STREET, VALLEJO, CA 94560

DRAWING TITLE:
WOOD FRAMING DETAILS

Date:	01/08/2014
Scale:	AS NOTED
Drawn:	STAFF
Checked:	RY
Job No.:	2011-09
Sheet:	**S6.3.1**
Of	Sheets

Jan 22, 2014 - 10:29am Z:\Year 2011 Jobs\2011-09.3 - Community Bldg\REVISED DRAWINGS FOR NEGOTIATED CONTRACT WITH WE LYONS\STRUCTURAL\S6.3.1.dwg

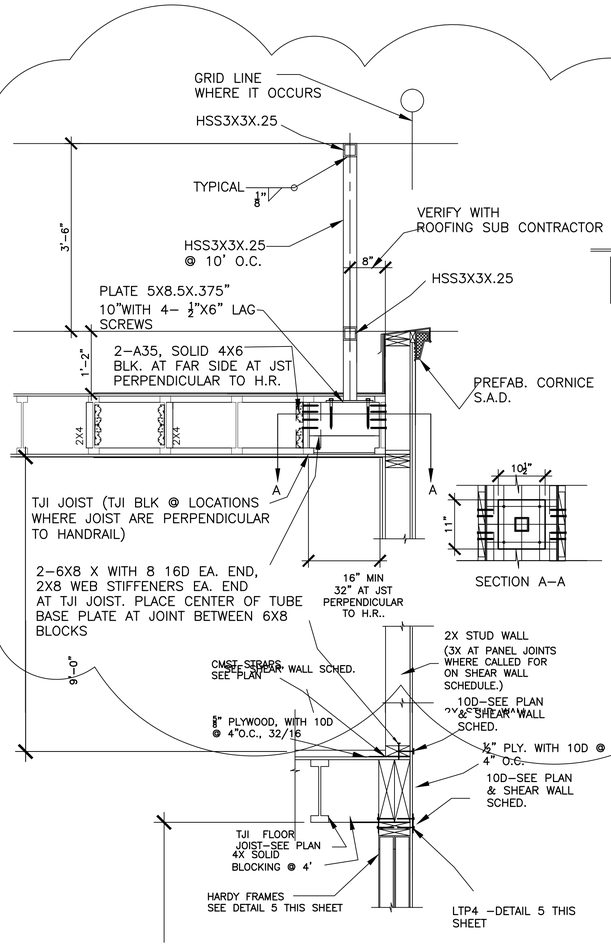

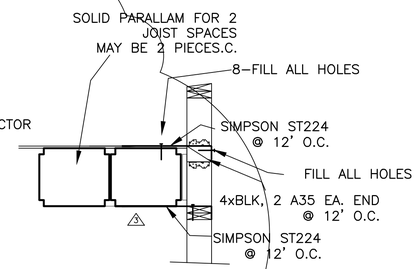

1.1 TYPICAL PARAPET SUPPORT

SCALE: 3/4" =1'-0"

SEE 1.2 FOR DETAILS AT WALLS PERPENDICULAR TO JOIST

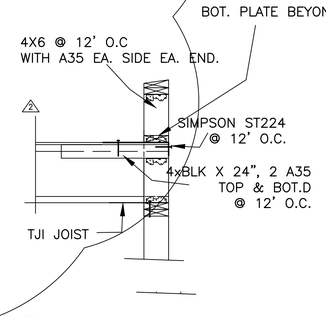

1.2 TYPICAL PARAPET SUPPORT

SCALE: 3/4" =1'-0" FILL ALL NAIL HOLE U.N.O.

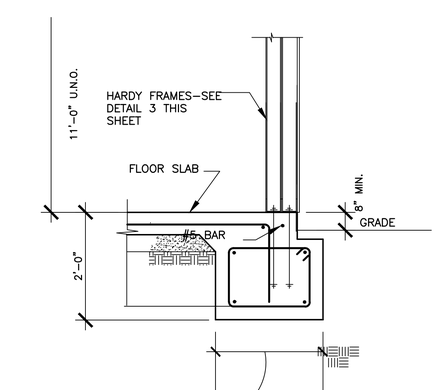

1 TYPICAL EXTERIOR WALL SECTION

SCALE: 3/4" =1'-0"

SEE DETAIL 1/S2.0 FOR CALL OUTS AT FOUNDATION

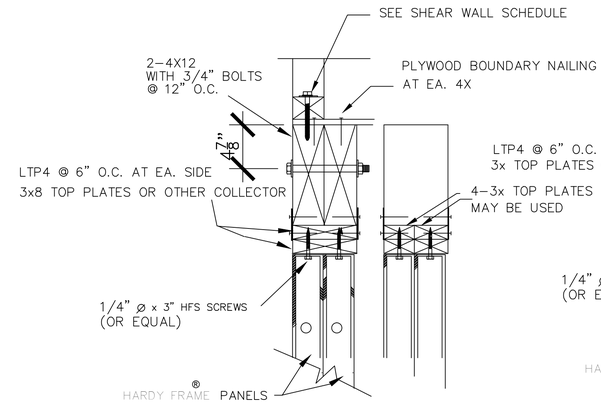

HARDY FRAME® SECTION AT TOP PLATES
FACE TO FACE INSTALLATION

5

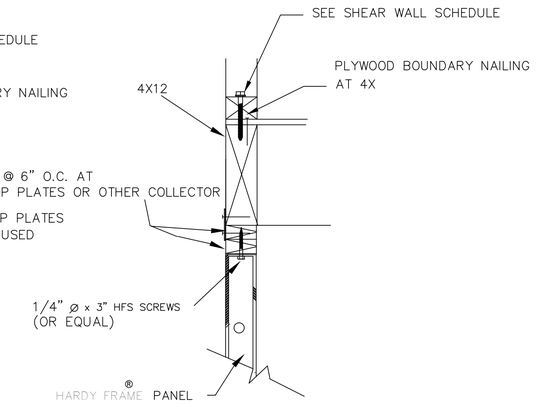

HARDY FRAME® SECTION AT TOP PLATES
SINGLE FACE INSTALLATION

6

ENGINEER OF RECORD IS PERMITTED TO MODIFY THIS DETAIL TO ACCOMMODATE A SPECIFIC CONDITION

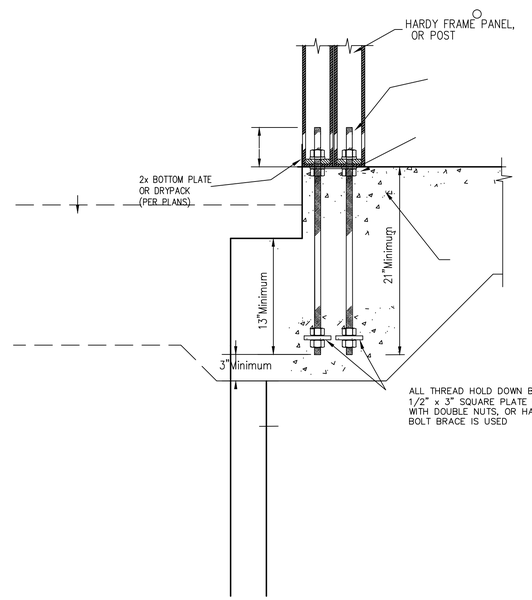

HARDY FRAME® SECTION AT BASE - FACE TO FACE POST & PANEL DOUBLE NUT

3 TYPICAL SECTION AT SIDE BY SIDE HARDY FRAMES

NO SCALE

ENGINEER OF RECORD IS PERMITTED TO MODIFY THIS DETAIL TO ACCOMMODATE A SPECIFIC CONDITION

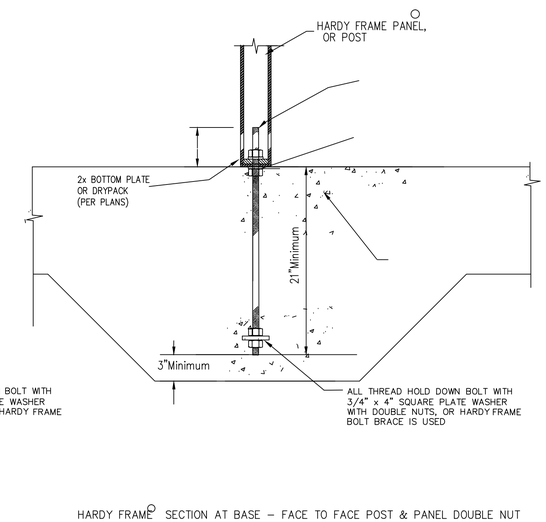

HARDY FRAME® SECTION AT BASE - FACE TO FACE POST & PANEL DOUBLE NUT

3A TYPICAL SECTION AT SINGLE HARDY FRAME

NO SCALE

REVISIONS	BY
9/26/2011 - PLAN CHECK	G.O.
1-8-14 BIDDING	T.G..
1-27-14 BIDDING	JO.

REGISTERED PROFESSIONAL ENGINEER
JOSEPH OAKLEY JR.
No. 2000
Exp. 09/30/15
STRUCTURAL
STATE OF CALIFORNIA

OAKLEY & OAKLEY
ARCHITECT, CIVIL & STRUCTURAL ENGINEERS
2 ARGONAUT
CLARENCEWAERS DRIVE, SUITE 815
510.562.6028
FAX 510.562.6043

PROJECT TITLE:
COMMUNITY CENTER
HARBOR PARK APARTMENTS
969 PORTER STREET, VALLEJO, CA 94560

DRAWING TITLE:

Date:	08/30/2011
Scale:	AS NOTED
Drawn:	STAFF
Checked:	RY
Job No.:	2011-09
Sheet:	S3.21
Of	Sheets

Jan 27, 2014 - 10:51pm \\SERVER\Server Drive D\Year 2011 Jobs\2011-09.3 - Community Bldg\REVISED DRAWINGS FOR NEGOTIATED CONTRACT WITH WE LYONS\STRUCTURAL\S3.21.dwg

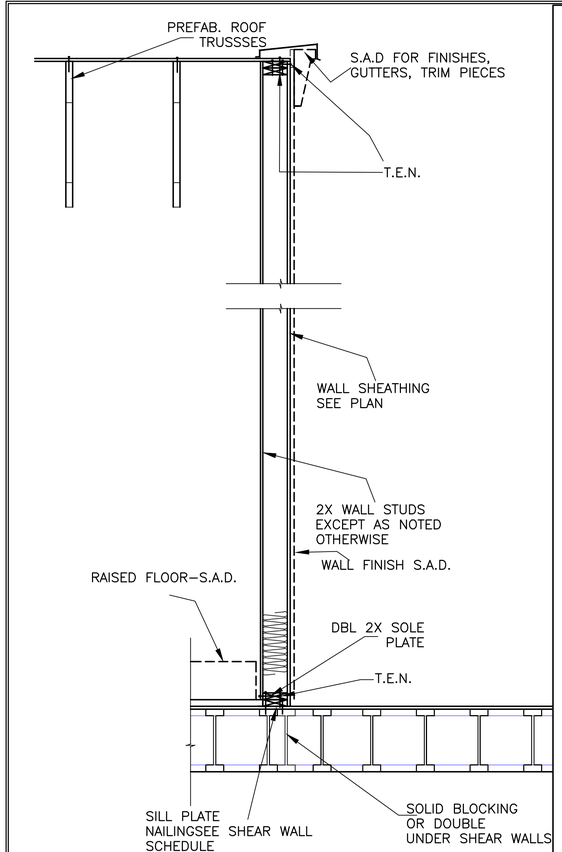

5.1 / S6.4 **TYPICAL EXTERIOR WALL SECTION AT GABLE ENDS**
SCALE 3/4"=1'–0"

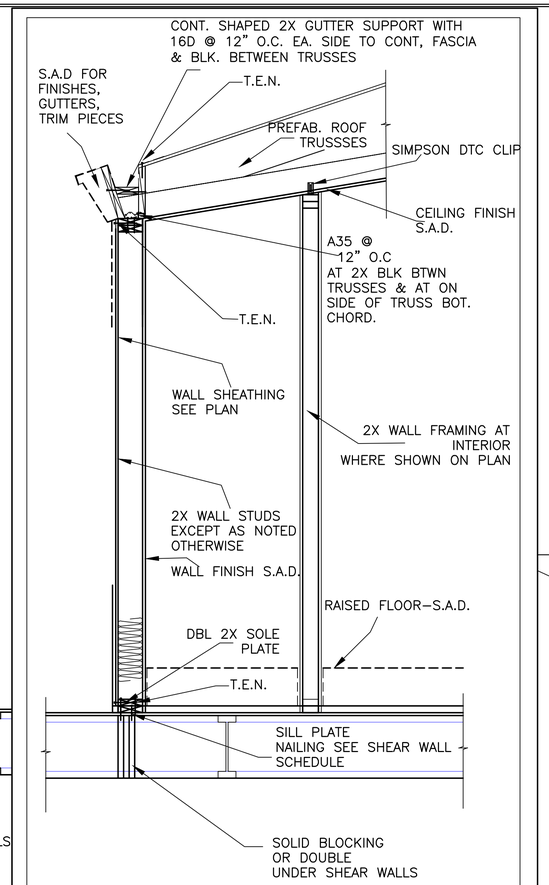

5 / S6.4 **TYPICAL EXTERIOR WALL SECTION**
SCALE 3/4"=1'–0"

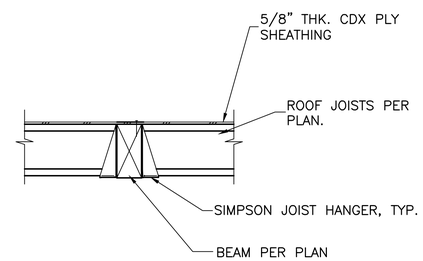

4 / S6.4 3/4"=1'–0"

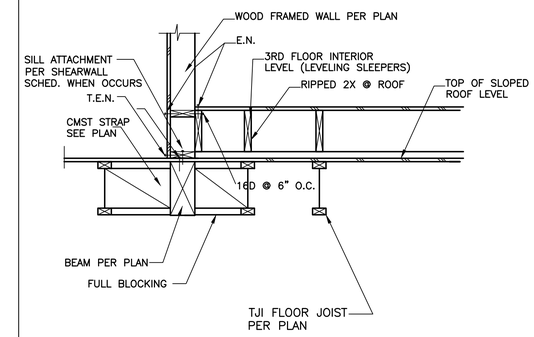

1 / S6.4 SECTION
3/4"=1'–0"

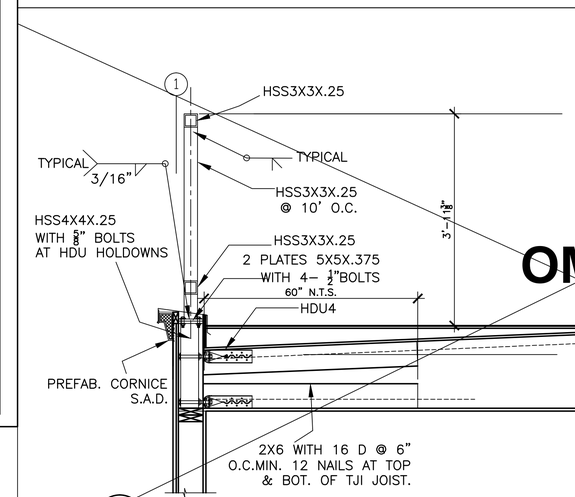

OMIT

6 / S6.4 **BALUSTER AT THRID FLOOR ROOF AND EXTERIOR DECKS**
SCALE 3/4"=1'–0"

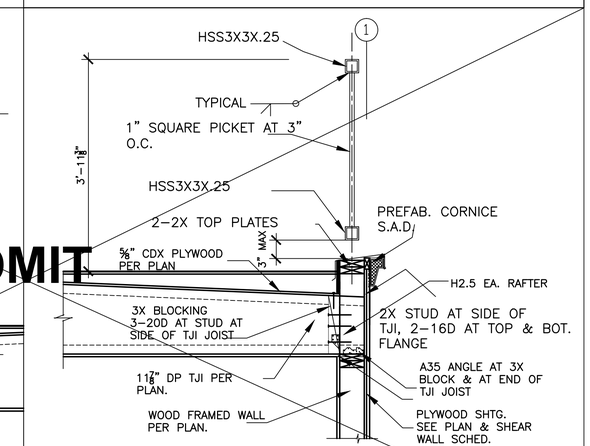

OMIT

2 / S6.4 **BALUSTER AT THRID FLOOR ROOF AND EXTERIOR DECKS**
SCALE 3/4"=1'–0"

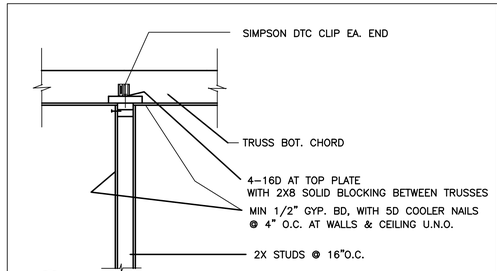

8 / S6.4 **TYPICAL BACKING DETAIL–NON BEARING WALLS**
SCALE 3/4"=1'–0"

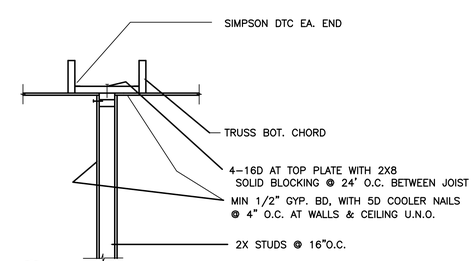

9 / S6.4 **TYPICAL BACKING AT WALLS PARALLEL TO JOIST AT NON BEARING WALLS**
SCALE 3/4"=1'–0"

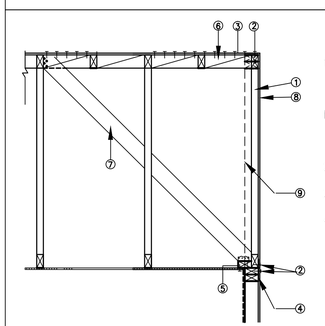

1– GABLE END SHEAR TRUSS/ GABLE END TRUSS. SEE PLAN

NOTE: BALLOON FRAME WALL TO BOTTOM CHORD OF GABLE END TRUSS OR GABLE END FRAMING

2– EDGE NAILING

3– ROOF SHT'G

4– LPT4–SEE PLAN FOR SHEAR WALL TYPE AND LOCATION SEE SHEAR WALL SCHED. FOR LPT4 SPACING AT THE SHEAR WALLS

5– 2X CONT. BACKING W/ 16d's @ 12" O.C. TO TRUSS AND TO DBL TOP PLATE. ALT. TO BACKING USE A–35 @ 48" O.C.

6– 2x BLK'G W/E.N. (MIN. 2 BAYS)

7– 2X 6 MEMBER AT 48" O.C. W/(4)– 16d'sS AT TOP & (1)A35 AT BOTTOM

8– SHEAR TRUSS SEE–PLYWOOD SHEATHED.

9– WALL MAY BE BALLOON FRAMED

10– CMST12X48
11– TRUSS TOP CHORD
12–16–16D
13– SOLID 2X BLOCKING WITH 16–16D
14– TRUSS WEB MEMBER

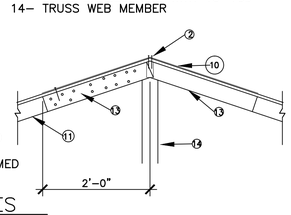

5.2 / S6.4 **TYPICAL STRAP DETAILS AT TRUSSES**
3/4"=1'–0"

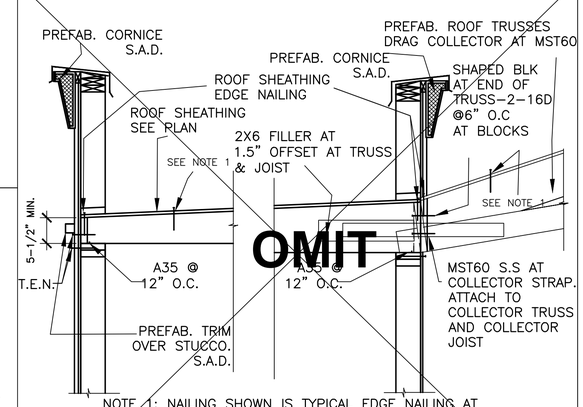

OMIT

NOTE 1: NAILING SHOWN IS TYPICAL EDGE NAILING AT SHEATHING U.N.O. USE EDGE NAILING ALONG JOIST AND TRUSS TOP CHORD AT CLOLLECTOR STRAP LOCATION

7 / S6.4 **SHEAR TRANSFER DETAIL AT THIRD FLOOR ROOF**
SCALE 3/4"=1'–0"

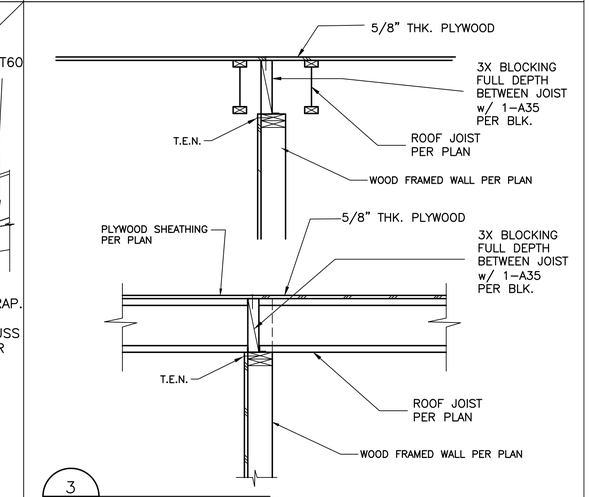

3 / S6.4 3/4"=1'–0"

REVISIONS	BY
9/26/2011 – PLAN CHECK	G.O.

REGISTERED PROFESSIONAL ENGINEER JOSEPH OAKLEY JR. No. 2000 Exp. 09/30/11 STRUCTURAL STATE OF CALIFORNIA

OAKLEY & OAKLEY
ARCHITECT, CIVIL & STRUCTURAL ENGINEERS
7700 EDGEWATER DRIVE
OAKLAND, CA 94621
510.562.6028 510.562.6043
FAX

PROJECT TITLE:
COMMUNITY CENTER
HARBOR PARK APARTMENTS
969 PORTER STREET, VALLEJO, CA 94560

DRAWING TITLE:
WOOD FRAMING DETAILS

Date:	08/30/2011
Scale:	AS NOTED
Drawn:	STAFF
Checked:	RY
Job No.:	2011–09
Sheet:	S6.4
Of	Sheets

Jan 27, 2014 – 10:56pm \\SERVER\Server Drive D\Year 2011 Jobs\2011-09.3 – Community Bldg\REVISED DRAWINGS FOR NEGOTIATED CONTRACT WITH WE LYONS\STRUCTURAL\S6.4.dwg

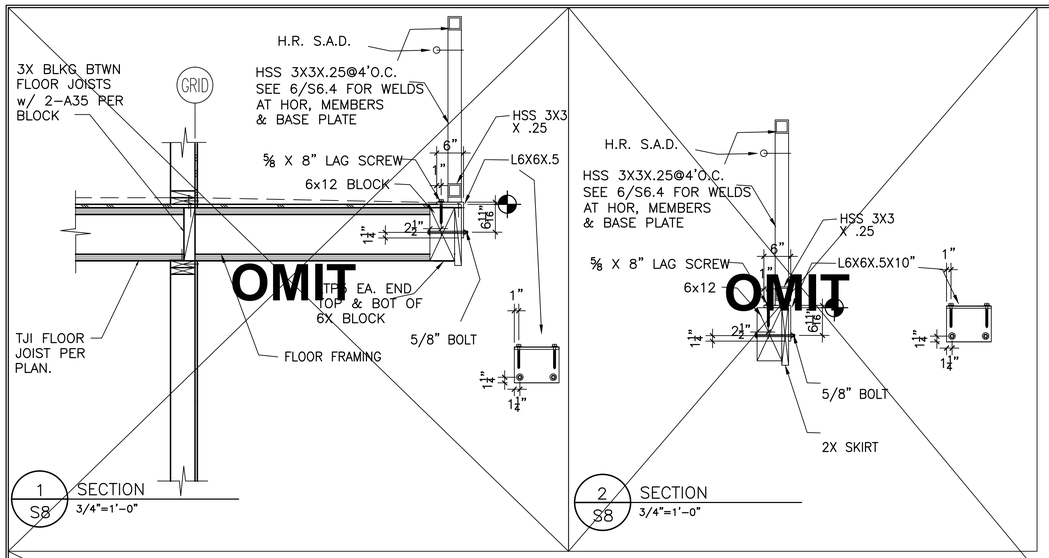

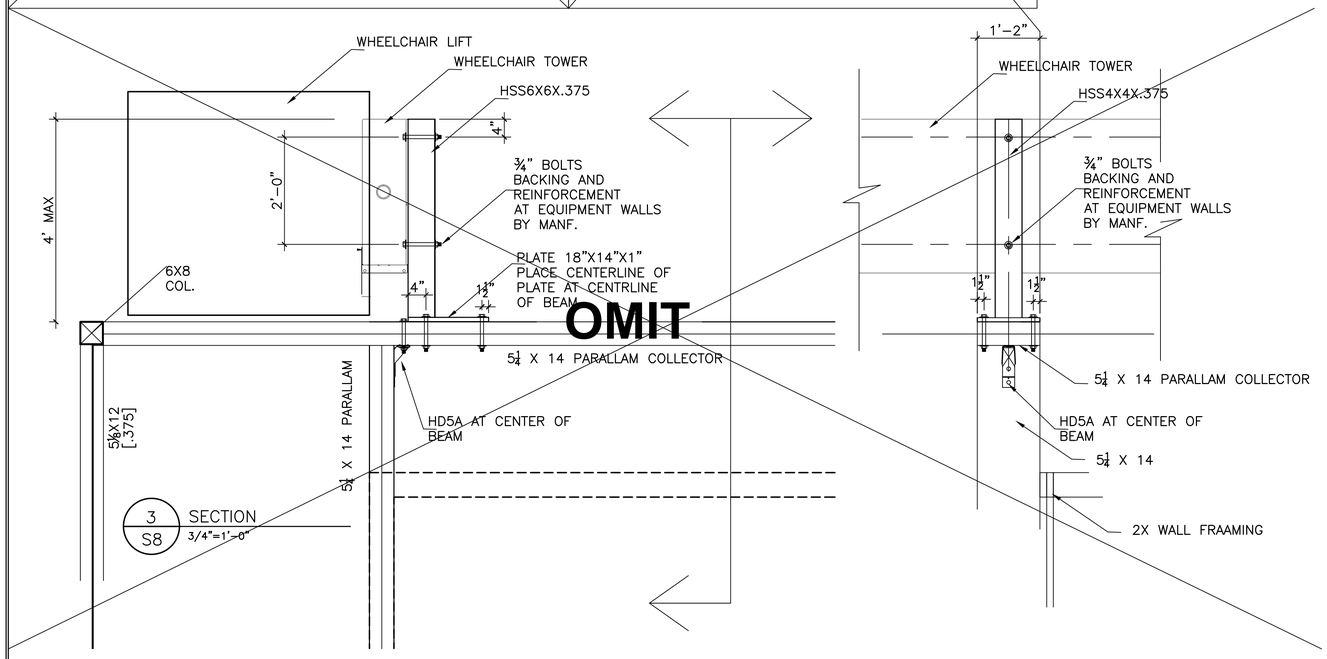

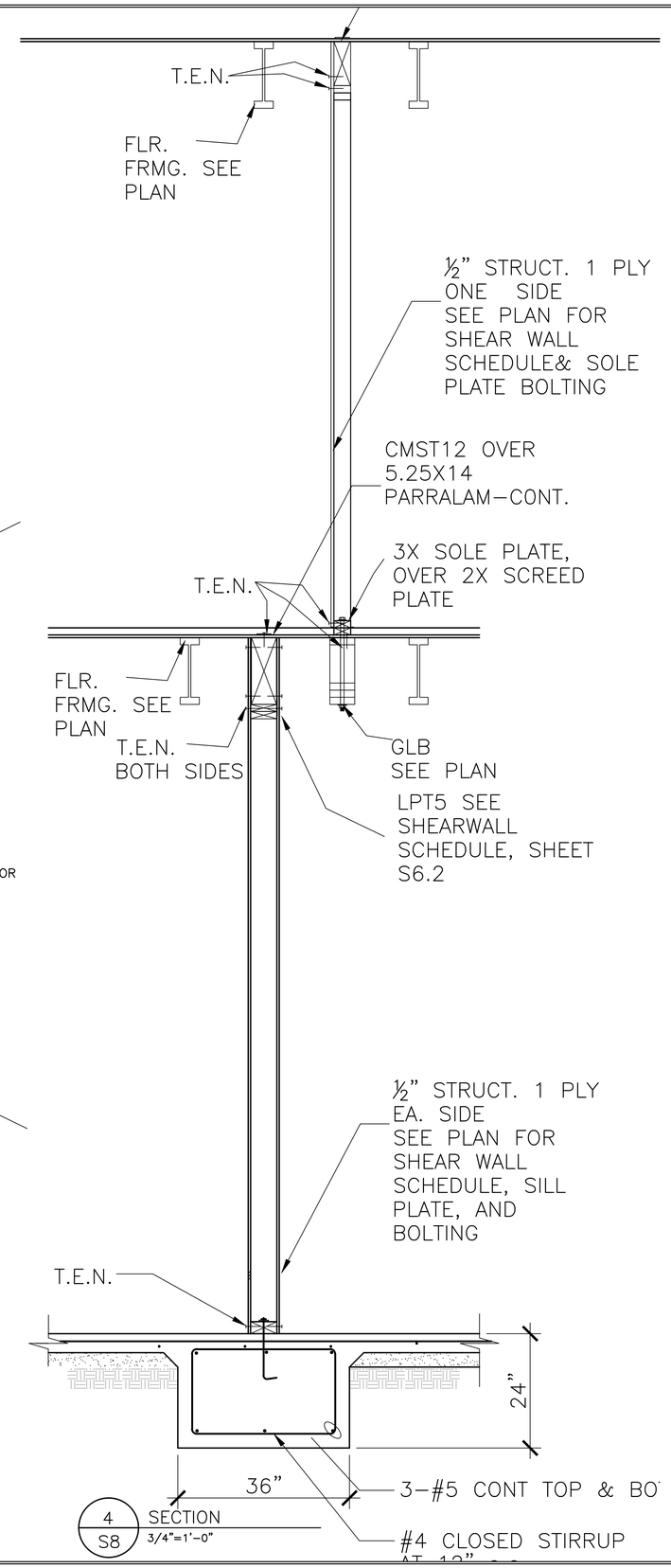

REVISIONS	BY
9/26/2011 - PLAN CHECK	G.O.

REGISTERED PROFESSIONAL ENGINEER
JOSEPH OAKLEY JR.
No. 2000
Exp. 09/30/11
STRUCTURAL
STATE OF CALIFORNIA

OAKLEY & OAKLEY
ARCHITECT, CIVIL & STRUCTURAL ENGINEERS
700 EDGEWATER
ALAMEDA, CA 94501
510.562.6028
FAX 510.562.6043

PROJECT TITLE:
COMMUNITY CENTER
HARBOR PARK APARTMENTS
969 PORTER STREET, VALLEJO, CA 94560

DRAWING TITLE:
STRUCTURAL DETAILS

Date:	08/30/2011
Scale:	AS NOTED
Drawn:	STAFF
Checked:	RY
Job No.:	2011-09
Sheet:	S8
Of	Sheets

Jan 27, 2014 - 11:39pm \\SERVER\Server Drive D\Year 2011 Jobs\2011-09.3 - Community Bldg\REVISED DRAWINGS FOR NEGOTIATED CONTRACT WITH WE LYONS\STRUCTURAL S8.dwg