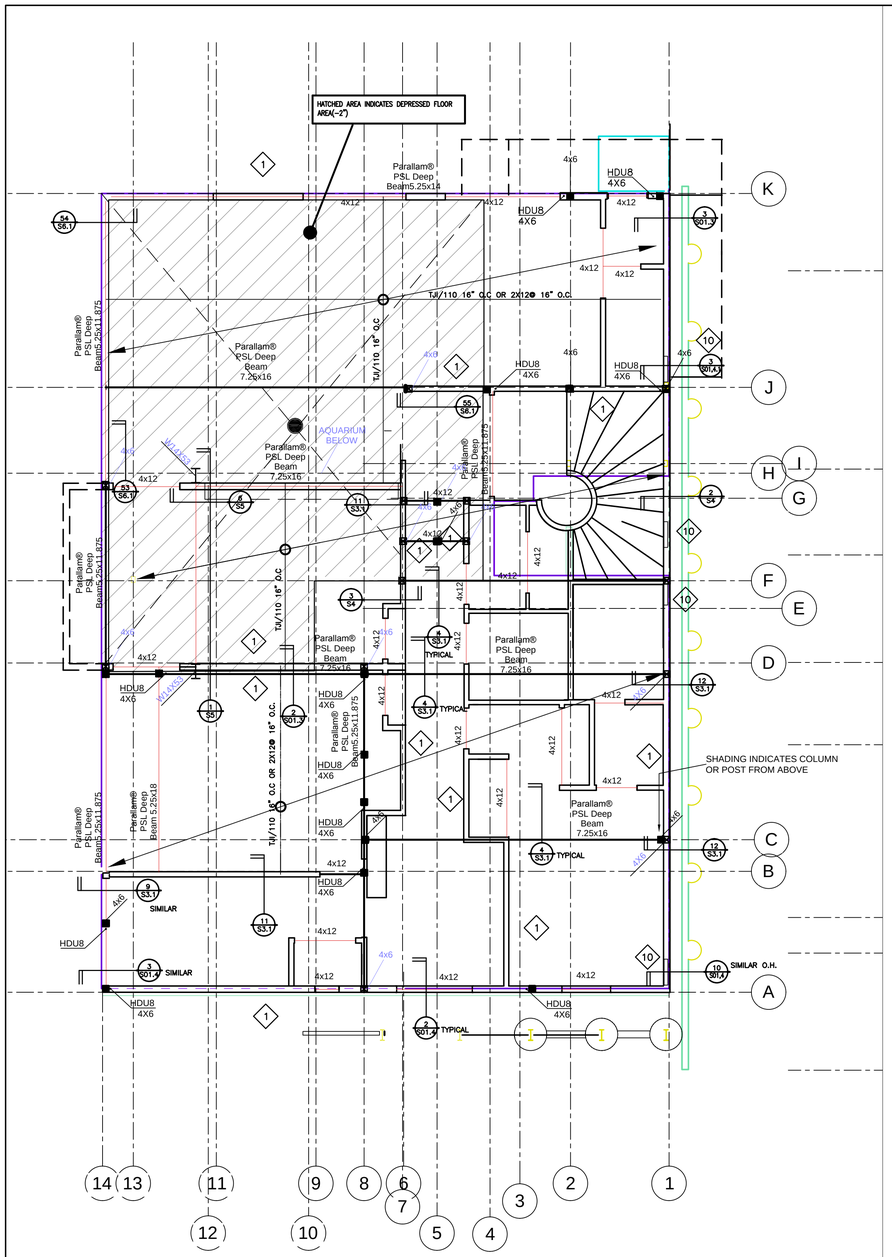

1 SECOND FLOOR FRAMING PLAN
3/16" = 1'-0"

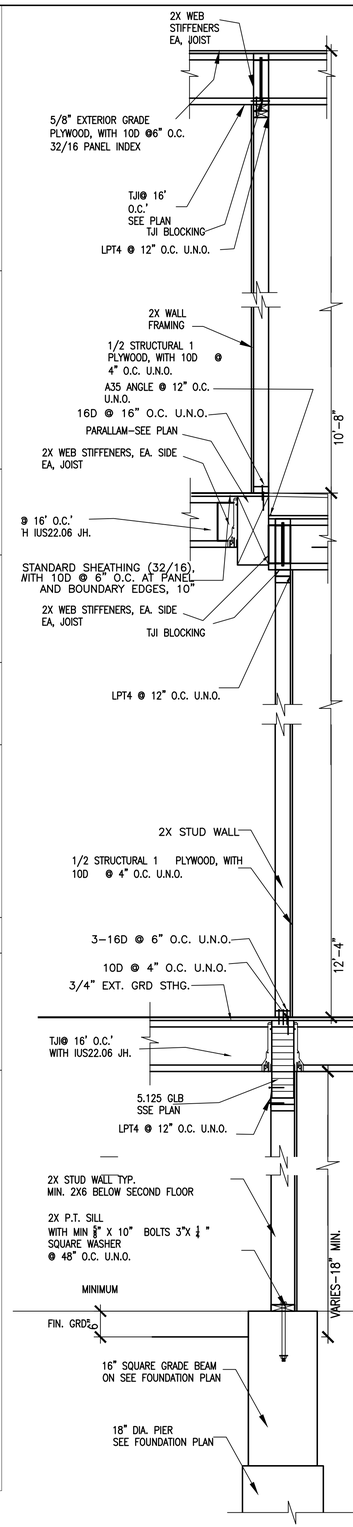

2 TYPICAL WALL SECTION
3/4" = 1'-0"

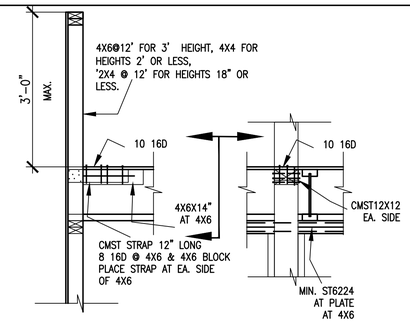

3 TYPICAL SECTION AT PARAPET
3/4" = 1'-0"

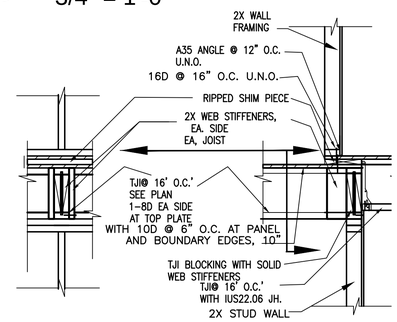

4 TYPICAL SECTION
3/4" = 1'-0"

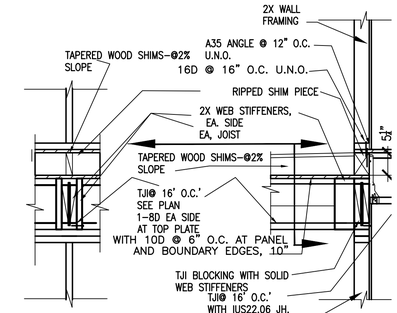

5 TYPICAL SECTION
3/4" = 1'-0"

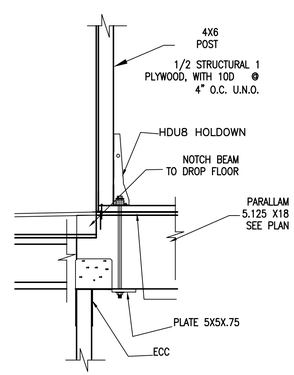

6 TYPICAL SECTION
3/4" = 1'-0"

ROOF FRAMING PLAN NOTES

1. SEE GENERAL NOTES ON SHEET S0.1.
2. SEE TYPICAL WOOD DETAILS ON SHEET S6.1 AND S6.2.
3. SEE ARCHITECHTURAL DRAWINGS FOR FINISHED FLOOR ELEVATIONS.
4. MARKS "TJI" ETC. INDICATE WOOD TRUSS JOIST.
5. NEW STRUCTURAL WOOD WALLS ARE SHOWN THUS: OR THUS: ON PLAN AND SHALL BE AS FOLLOWS:
   2X6 AT 16" o.c. FROM GROUND/FDN TO 2ND FLOOR
   2X4 AT 16" o.c. FROM 2ND FLOOR TO THE ROOF.
   USE 3X STUDS AT ALL PANEL JOINTS AT WOOD FRAMED SHEAR WALLS.
   SEE ARCHITECTURAL DRAWINGS FOR NON-LOAD BEARING PARTITIONS.
6. DENOTES (N) 15/32" THK. STRUCTURAL I PLYWOOD SHEAR WALL. AS REQUIRED. PLYWOOD EXTENDS FULL HEIGHT OF THE WALL. SEE DETAILS AND SCHEDULE ON SHEET S8
7. FLOOR TO FLOOR HOLDOWN TIES ARE REQUIRED AT EACH END OF SHEAR WALL AND AT LOCATIONS NOTED THUS: HD1 . ALL HOLDOWNS TO BE ON 4x6 POST U.N.O. SEE DETAILS ON SHEET S8
8. WHERE METAL FRAMING CONNECTORS ARE REQUIRED, "SIMPSON" CONNECTORS ARE DENOTED.
9. ON PLAN INDICATES 4X6 POST U.N.O.
10. SEE 4.3 / S6.1 FOR HEADER SIZES NOT CALLED OUT ON PLAN
11. SEE ARCH. DWGS. FOR SLOPES OF ROOFS/EXTERIOR DECKS.
12. ALL GLULAM BEAMS 24F-V4
13. [X] INDICATES CAMBER IN GLULAM BEAMS
14. SEE ARCH. DWGS. FOR EXACT LOCATION OF WINDOWS & DOORS.
15. ALL FLOOR JOIST ARE 11.875" DEEP U.N.O. WITHSTANDARD SHEATHING
16. AT SHEAR WALL TYPE 9 AND 10 PROVIDE HARDY PANEL PER THE WIDTHS INDICATED ON THE SHEAR WALL SCHEDULE SHOWN ON SHEET S6.2. PROVIDE ASSOCIATED HOLDOWNS, SILL ANCHORAGE AND SHEAR TRANSFER DETAILS PER THE MANUFACTURES STANDARD DETAILS.
17. WHERE NOTED ON PLAN AS "HP HD" INDICATES HARDY PANEL HOLDOWN. PROVIDE HARDY PANEL FLOOR TO FLOOR HOLDOWN PER THE MANUFACTURES STANDARD DETAILS.
18. WHERE NOTED ON PLAN AS "HP HD*" INDICATES HARDY PANEL HOLDOWN THAT RESTS ATOP A BEAM. PROVIDE HARDY PANEL FLOOR TO BEAM HOLDOWN PER THE MANUFACTURES STANDARD DETAILS.
19. FLOOR DRAIN
20. ALL TJI'S ARE TJI/360, TYP. U.N.O..
21. 4X6 POST FROM ABOVE
22. PROVIDE BLOCKING @ 4'-0" O.C. IN-BETWEEN JOISTS BLOCK ALL PLYWOOD EDGES
23. DOUBLE JOIST UNDER ALL PARALLEL PARTITIONS.
24. CONTINUOUS CMST12 STRAP. CENTER STRAP AT END OF BEAM AND PROVIDE FULL BLOCKING AT FLOOR JOIST
25. NOT USED.
26. FOR STAIR 1 AND STAIR 2 FRAMING PLANS AND ELEVATIONS, SEE SHEET S5.1.
27. INDICATES DRAG STRUT/CHORD USING CMST12 CONT. STRAP. SEE 10B / S6.3 FOR CONNECTION INFO. EXTEND STRAP ACROSS\ ENTIRE DIAPHRAGM U.N.O.

RESIDENCE FOR MR. CARL ADAMS

OAKLEY & OAKLEY
ARCHITECTS & ENGINEERS
7700 EDGEWATER DRIVE, STE. 615
OAKLAND, CA 94621
510.562.6028
FAX 510.562.6043

STRUCTURAL ENGINEERS:
OAKLEY & OAKLEY
7700 EDGEWATER DRIVE, SUITE 615
OAKLAND, CA 94621
Phone: 510-562-6028
Fax: 510-562-6043

CALIFORNIA GREEN CONSULTANT:
HASFRA BURT, AIA
2511 CASTRO VALLEY BLVD., SUITE 109
CASTRO VALLEY, CA 94546
510-830-4794

REGISTERED PROFESSIONAL ENGINEER
JOSEPH OAKLEY JR.
No. 2000
Exp. 09/30/15
STRUCTURAL
STATE OF CALIFORNIA

No.	Description	Date
—		

OWNER:
MR. CARL ADAMS
6333 JERILYNN AVENUE
RICHMOND, CA 94806

SECOND FLOOR FRAMING PLAN

Project number	2013-63
Date	1/17/2014
Drawn by	STAFF
Checked by	J.O.

S01.3

Scale AS NOTED