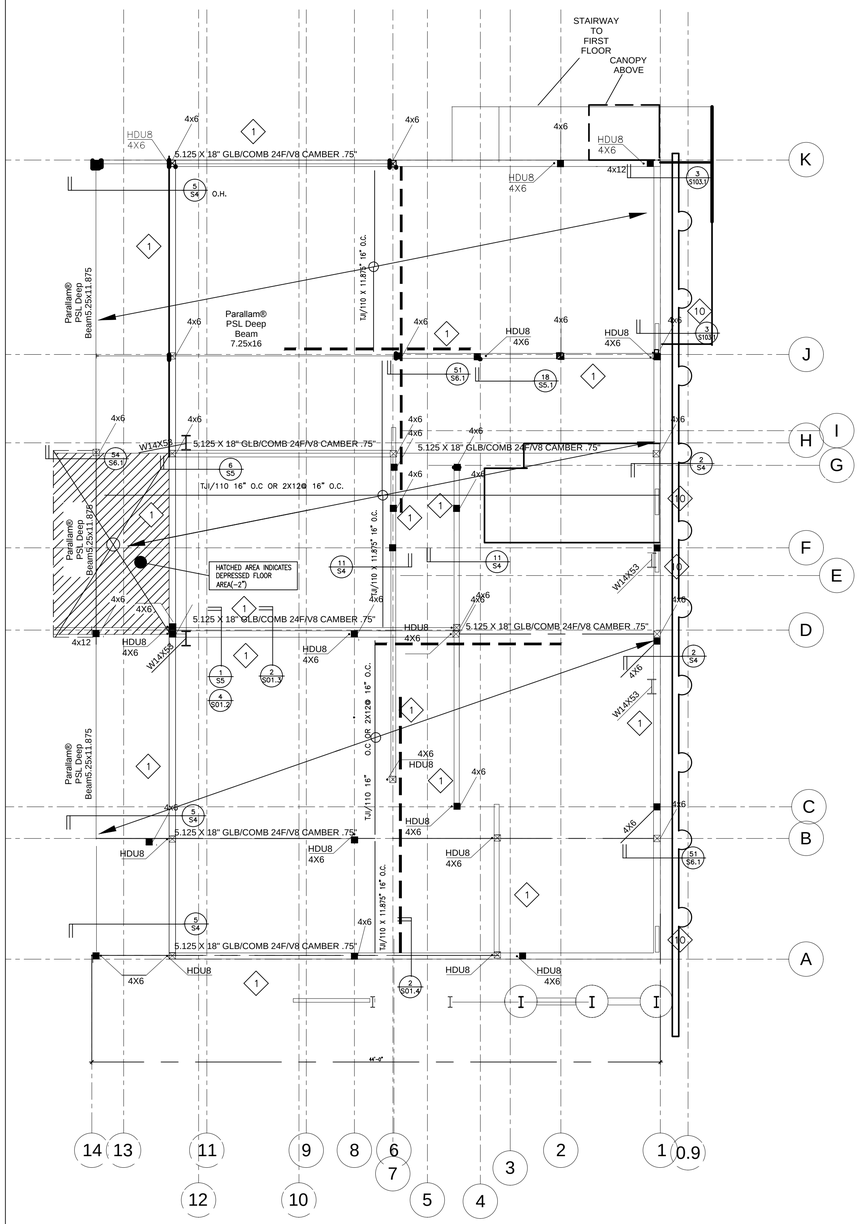

1 Level 1 FIRST FLOOR FRAMING PLAN
3/16" = 1'-0"

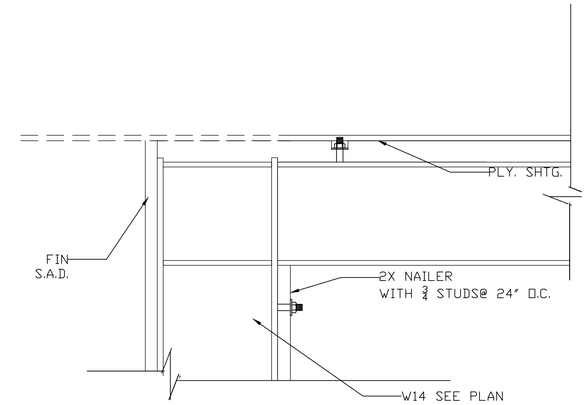

2 1 1/2" = 1'-0"

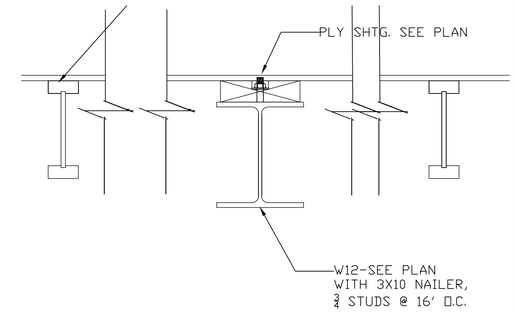

3 1 1/2" = 1'-0"

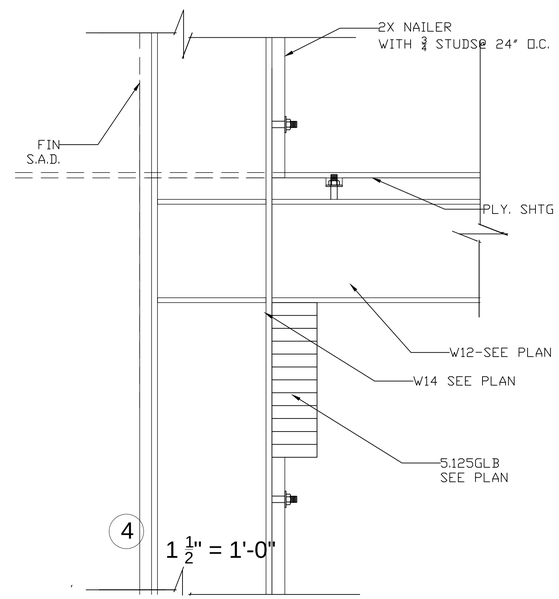

4 1 1/2" = 1'-0"

RESIDENCE FOR MR. CARL ADAMS

OAKLEY & OAKLEY
ARCHITECTS & ENGINEERS
7700 EDGEWATER DRIVE, STE. 615
OAKLAND, CA 94621
510.562.6028
FAX 510.562.6043

STRUCTURAL ENGINEERS:
OAKLEY & OAKLEY
7700 EDGEWATER DRIVE, SUITE 615
OAKLAND, CA 94621
Phone: 510-562-6028
Fax: 510-562-6043

CALIFORNIA GREEN CONSULTANT:
HASFRA BURT, AIA
2511 CASTRO VALLEY BLVD., SUITE 109
CASTRO VALLEY, CA 94546
510-830-4794

REGISTERED PROFESSIONAL ENGINEER
JOSEPH OAKLEY JR
No. 2000
Exp. 09/30/15
STRUCTURAL
STATE OF CALIFORNIA

No.	Description	Date
—		

OWNER:
MR. CARL ADAMS
6333 JERILYNN AVENUE
RICHMOND, CA 94806

FIRST FLOOR FRAMING PLAN

Project number	2013-63
Date	1/17/2014
Drawn by	STAFF
Checked by	J.O.

S01.2

Scale AS NOTED